03 GUNDAMID-HELL CUSTOM

MOBILE SUIT:XXXG-01 D2

GUNDAM DEATHSCYTHE H VER. RARRA

1/60 SCALE REAL PAPERCRAFT MODEL



GUNDAM HELL CUSTOM

MOBILE SUIT:XXXG-01 D2

GUNDAM DEATHSCYTHE H

http://blog.naver.com/rarra1121
http://cafe.naver.com/justpape.cafe

주 의 사 항

- ■순접권장
- ■핀셋사용
- ■권장용지 : **120g**
- ■네오디뮴 실린더자석 사용**(**날개가동**)**

— 바로접기 ▨ 잘라내기 ★ ♥ 이어붙이기
---- 반대로접기 × 풀칠 ⊗ 뒷면풀칠 ↷ 말기

PARTS LIST

A	B	C	D	E	F	G	H	I	J	K	L	M	N
BLACK	BLACK	BLACK	BLACK	BLACK	BLACK	BLACK	BLACK	BLACK	BLACK	GRAY	GRAY	GRAY	GRAY

O	P	Q	R	S	T	U	V	W					
GRAY	GRAY	GRAY	RED	YELLOW	WHITE	WHITE	WHITE	WHITE					

A HEAD

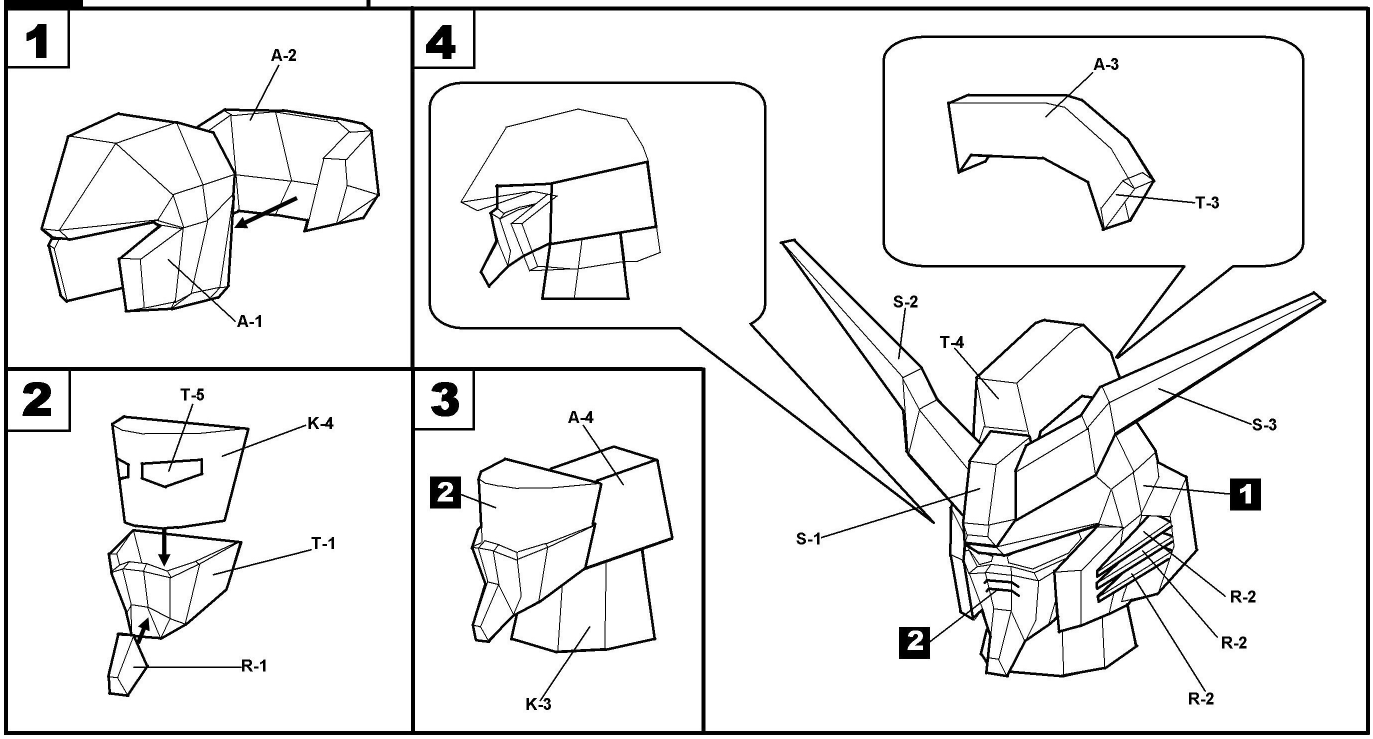

B BODY & WAIST

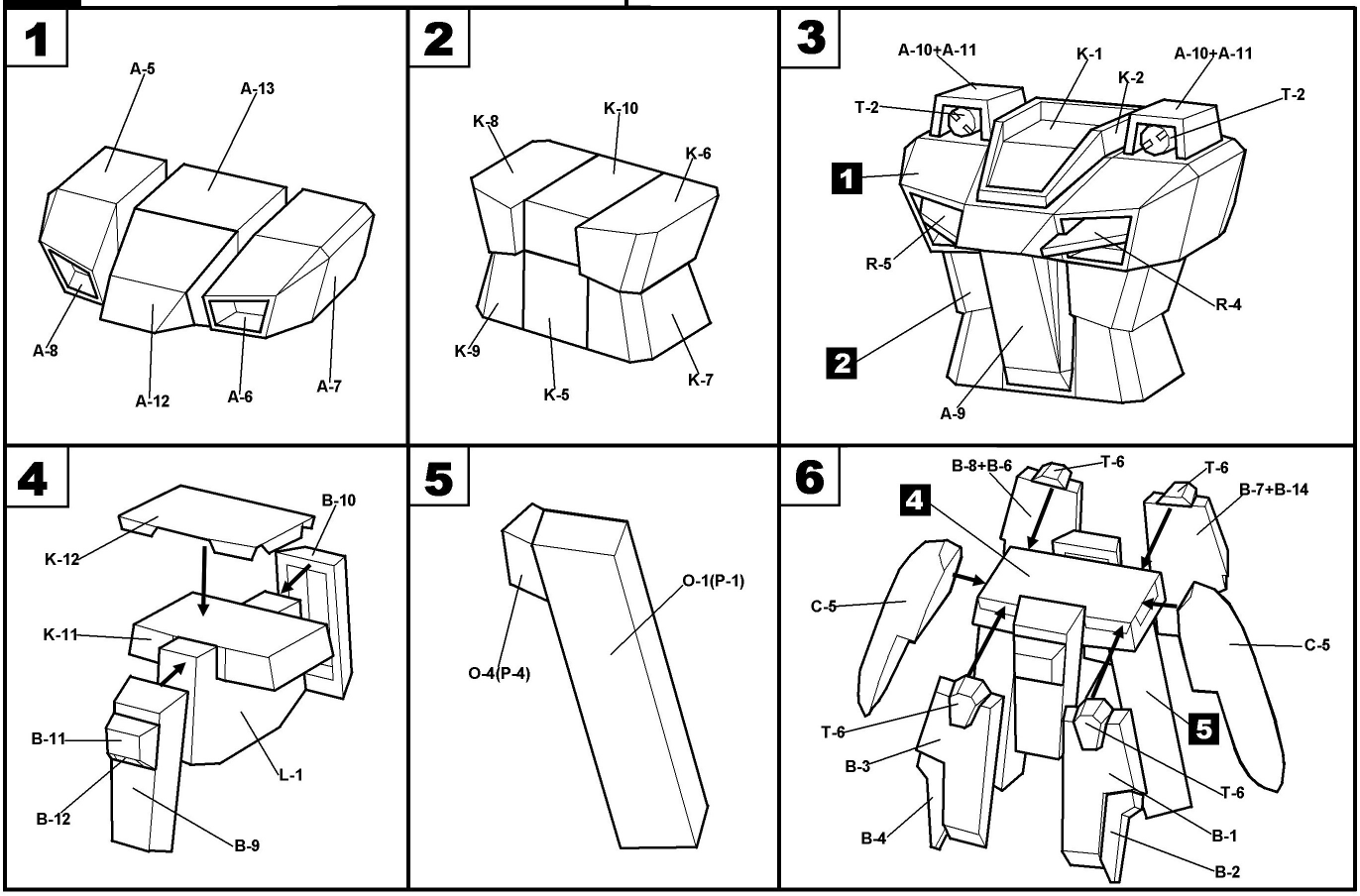

C ARM

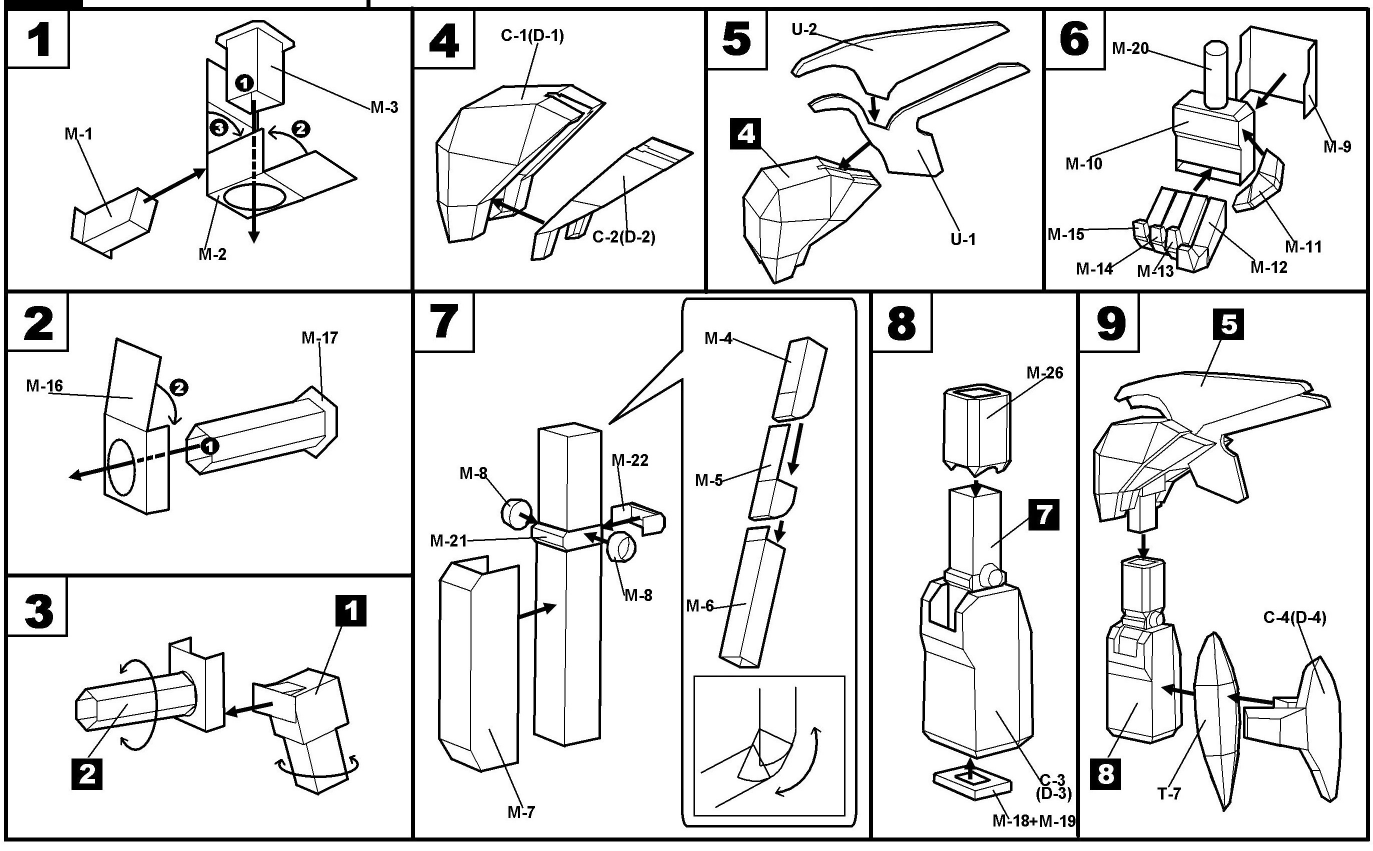

D LEG

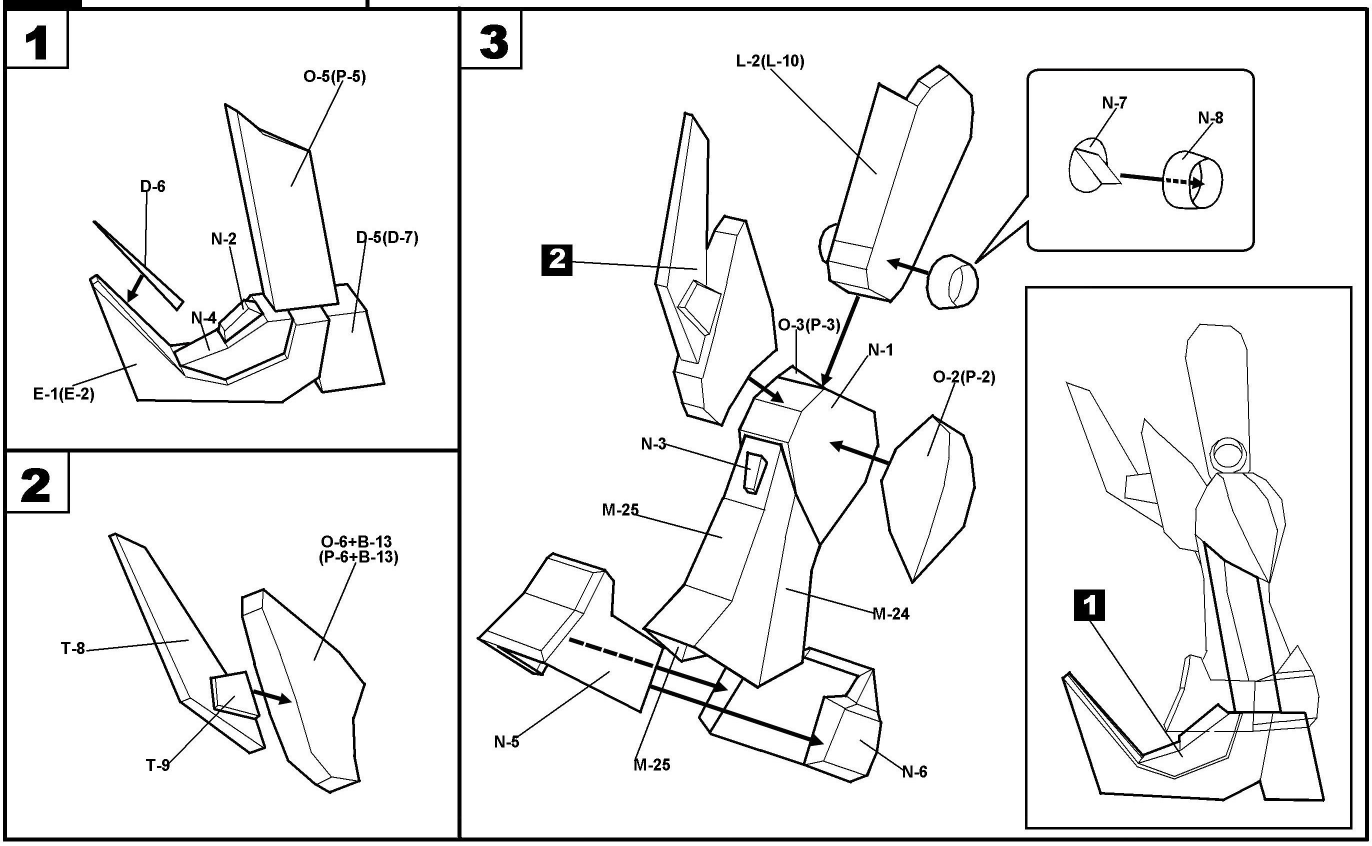
1
O-5(P-5)
D-6
N-2
D-5(D-7)
N-4
E-1(E-2)
2
O-6+B-13
(P-6+B-13)
T-8
T-9
3
L-2(L-10)
N-7
N-8
2
O-3(P-3)
N-1
O-2(P-2)
N-3
M-25
M-24
N-5
M-25
N-6
1

E WING

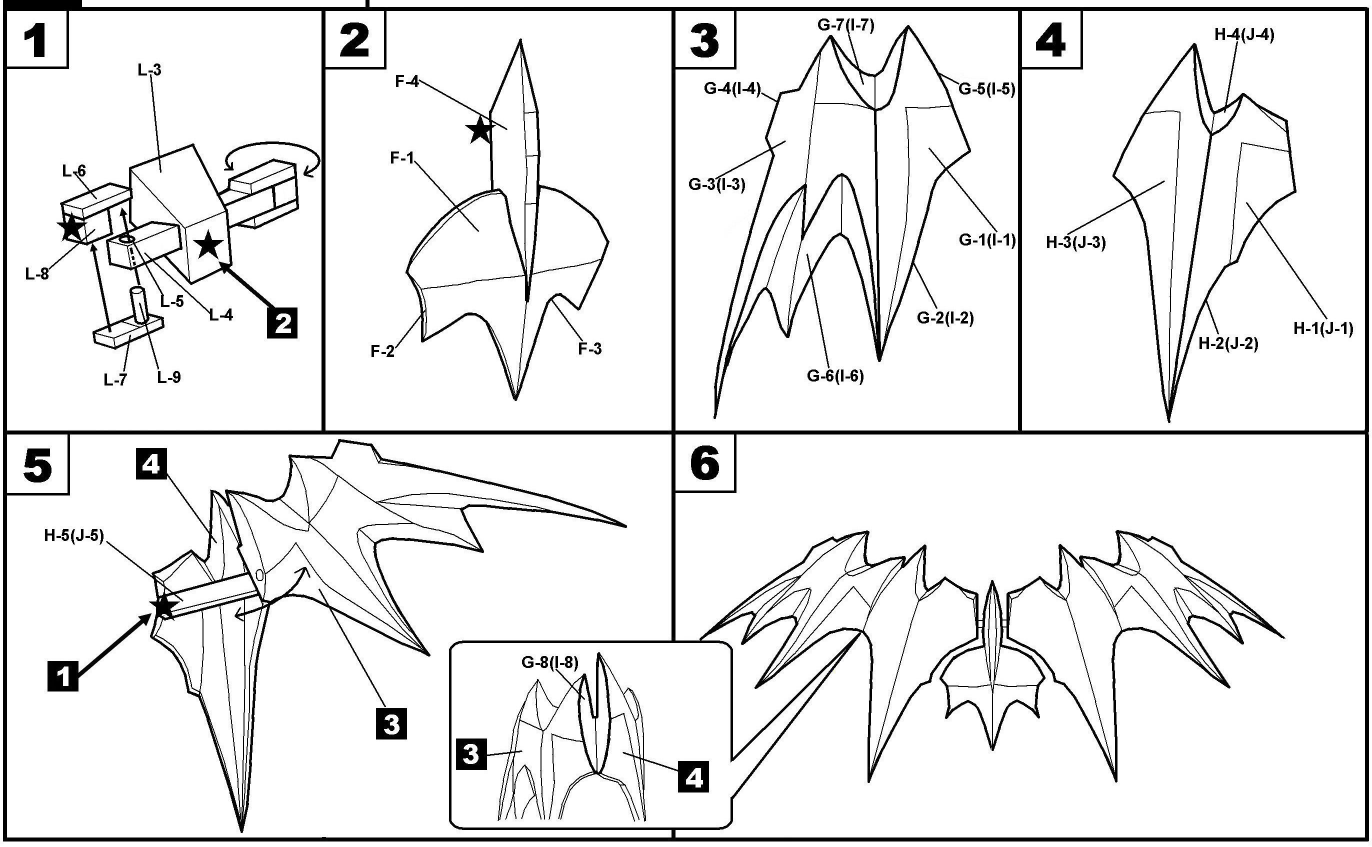
1
L-3
L-6
L-8
L-5
L-4
2
L-7
L-9
2
F-4
F-1
F-2
F-3
3
G-7(I-7)
G-4(I-4)
G-5(I-5)
G-3(I-3)
G-1(I-1)
G-2(I-2)
G-6(I-6)
4
H-4(J-4)
H-3(J-3)
H-2(J-2)
H-1(J-1)
5
4
H-5(J-5)
1
3
G-8(I-8)
3
4
6

F ALL

1

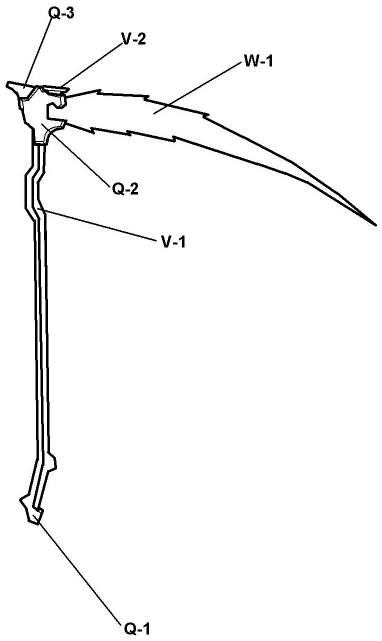

2

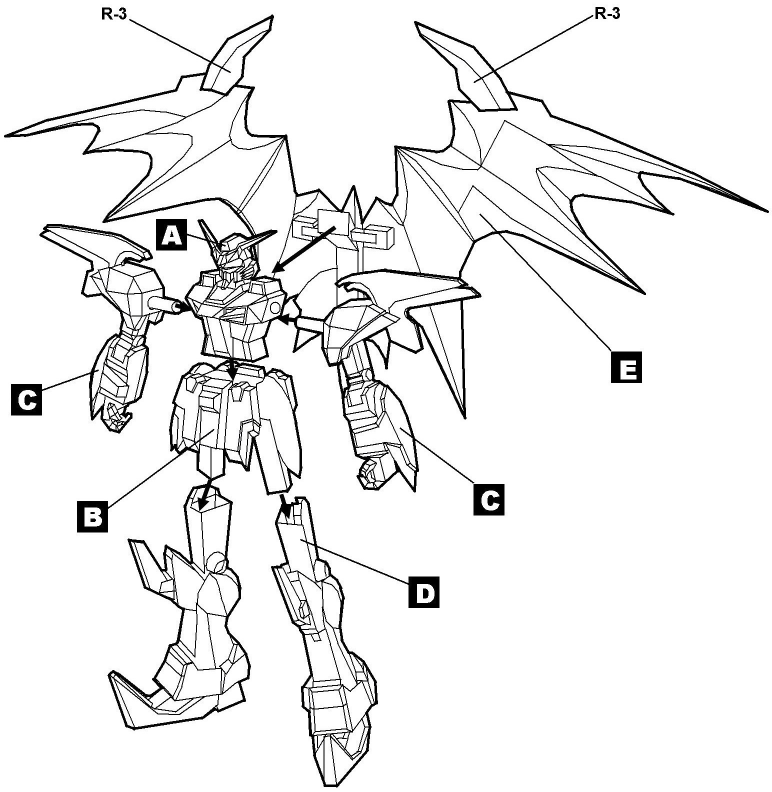

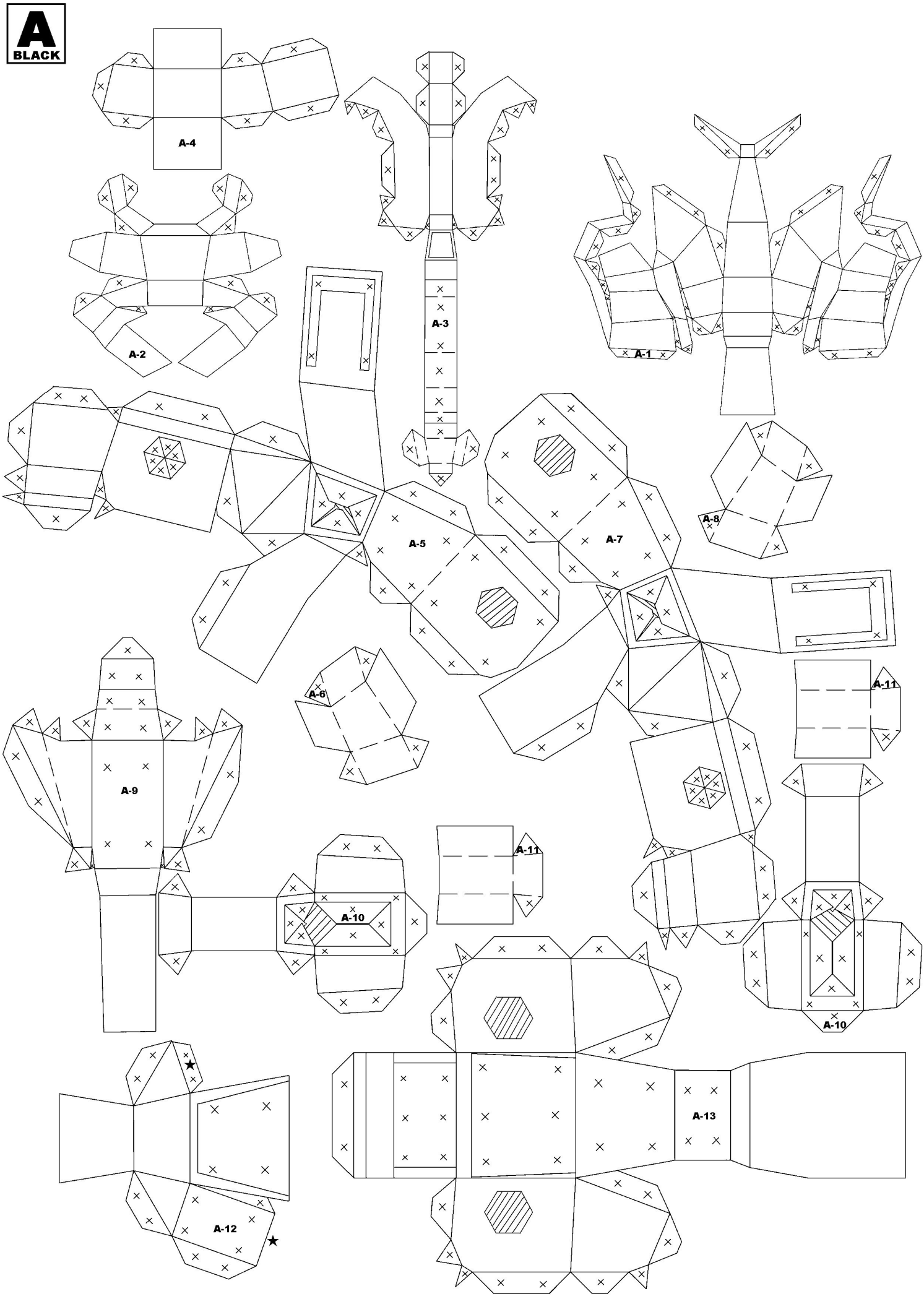
A
BLACK
A-4
A-3
A-2
A-1
A-8
A-5
A-7
A-6
A-11
A-9
A-11
A-10
A-10
A-13
A-12

B
BLACK

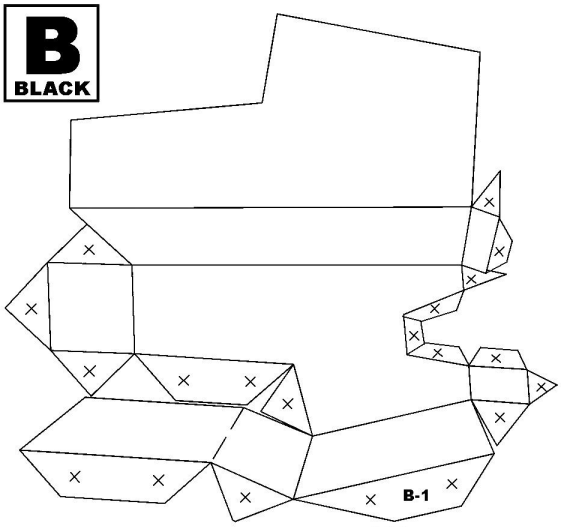

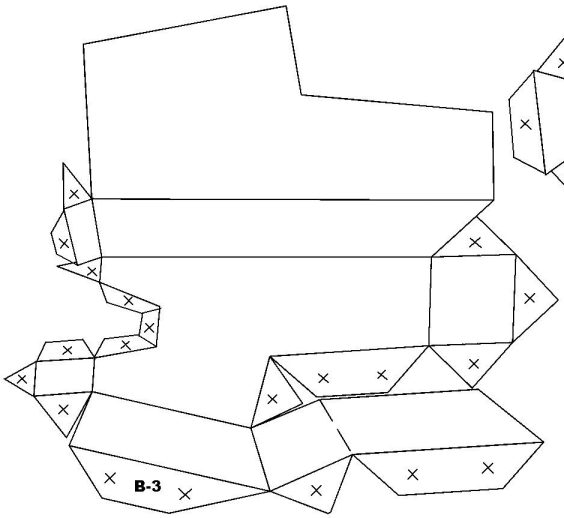

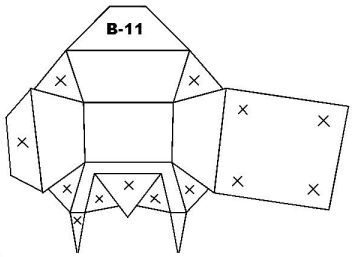

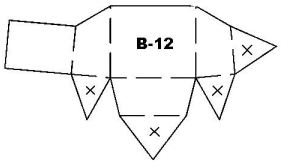

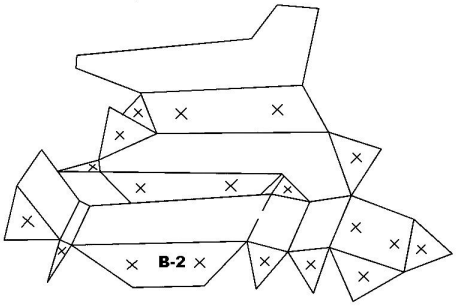

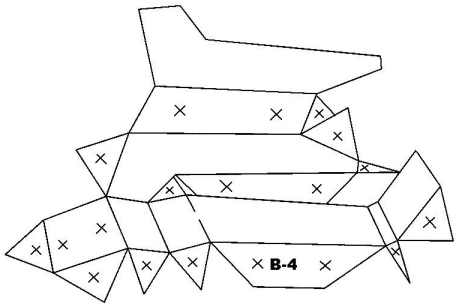

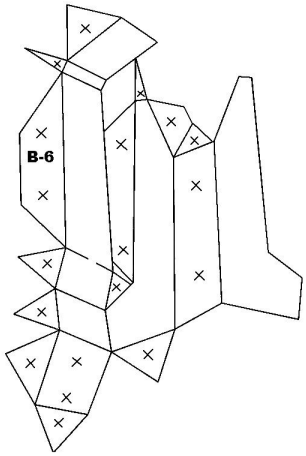

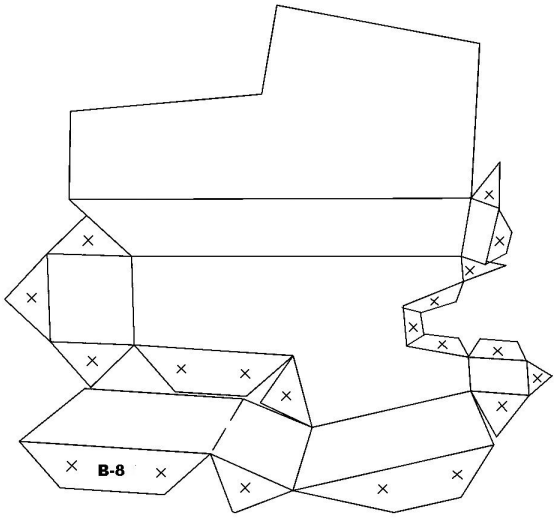

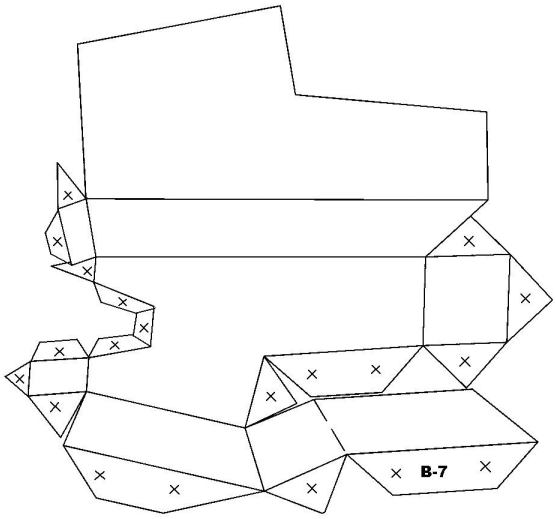

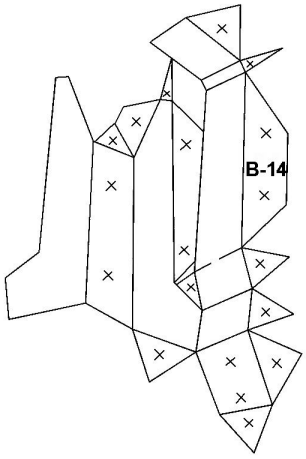

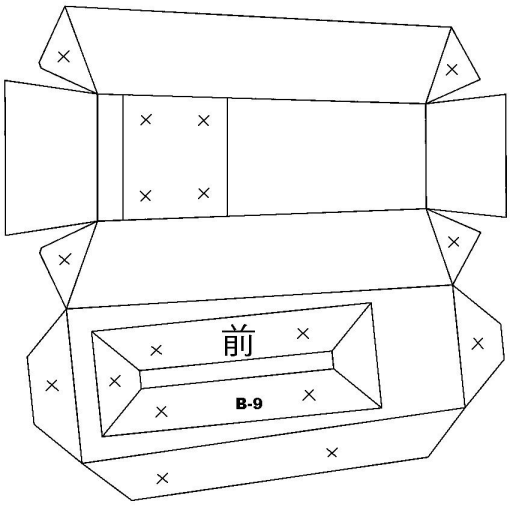

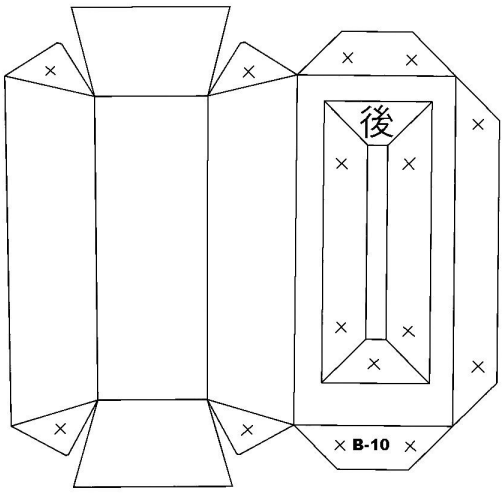

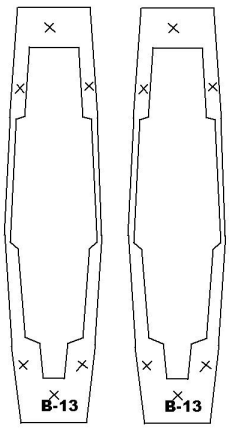

C
BLACK

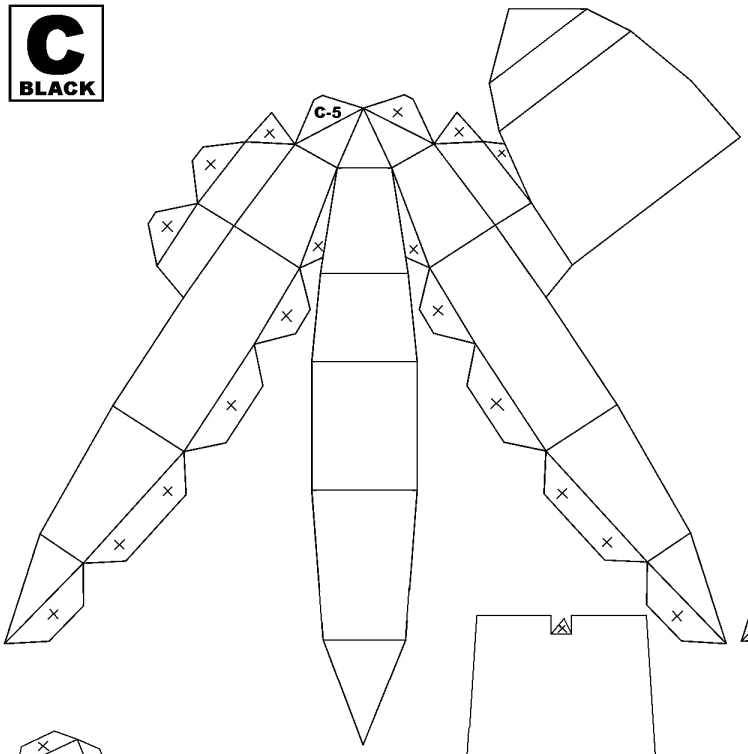

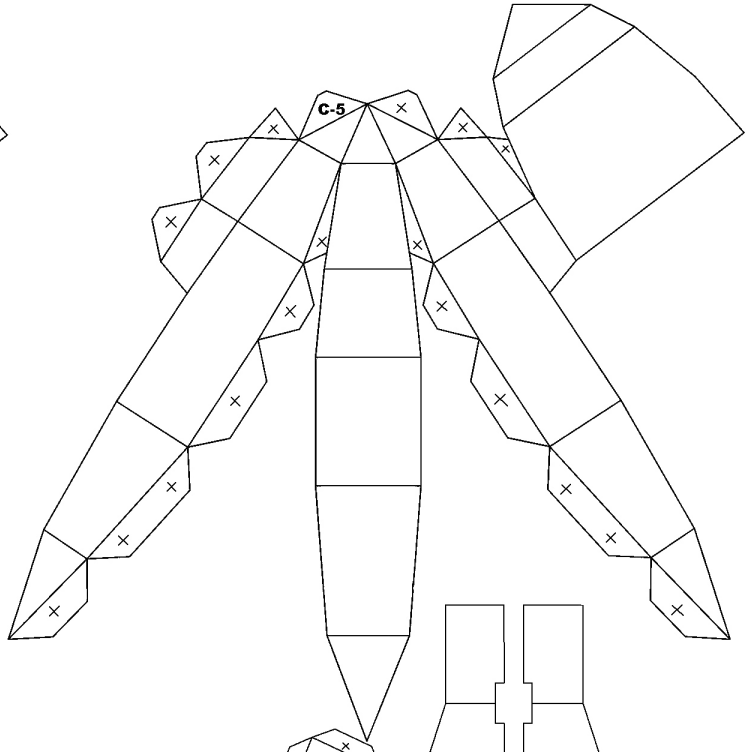

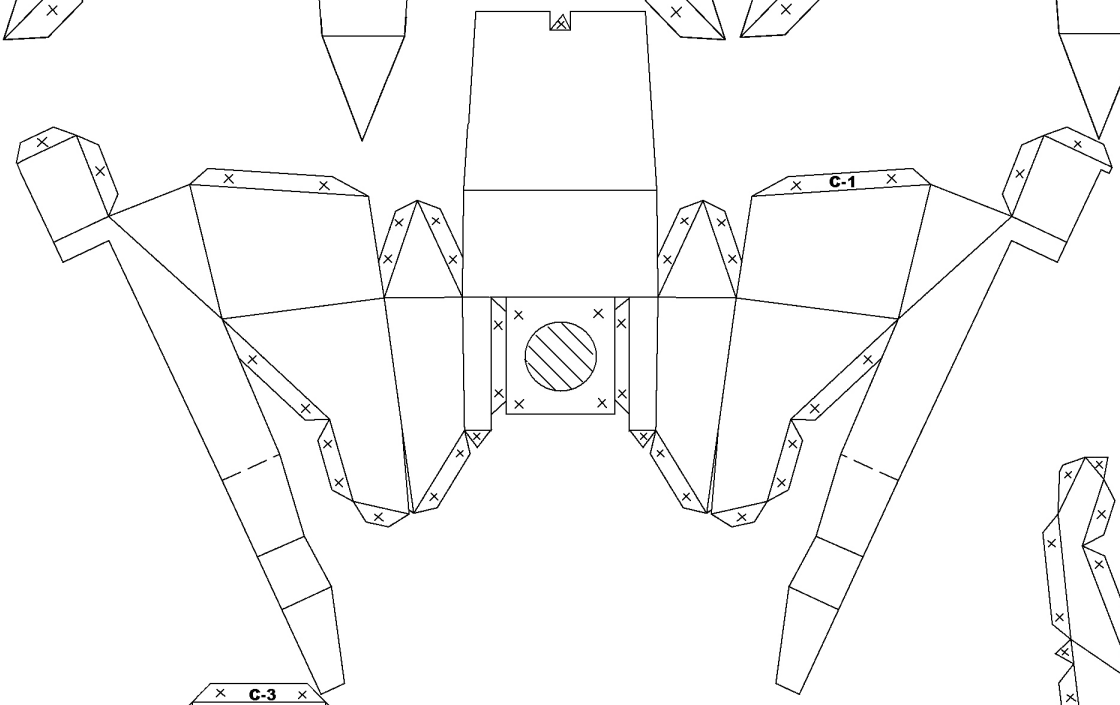

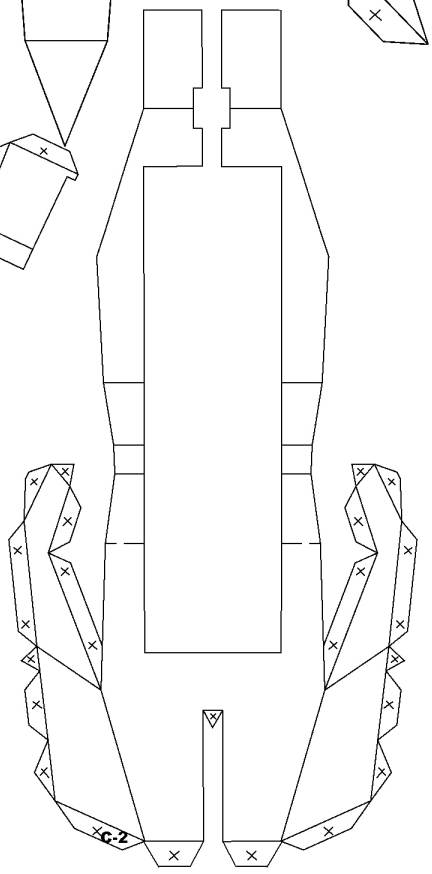

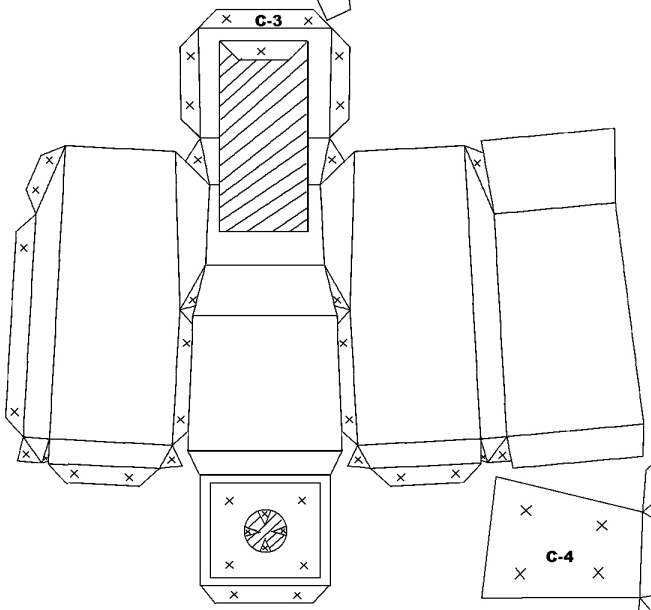

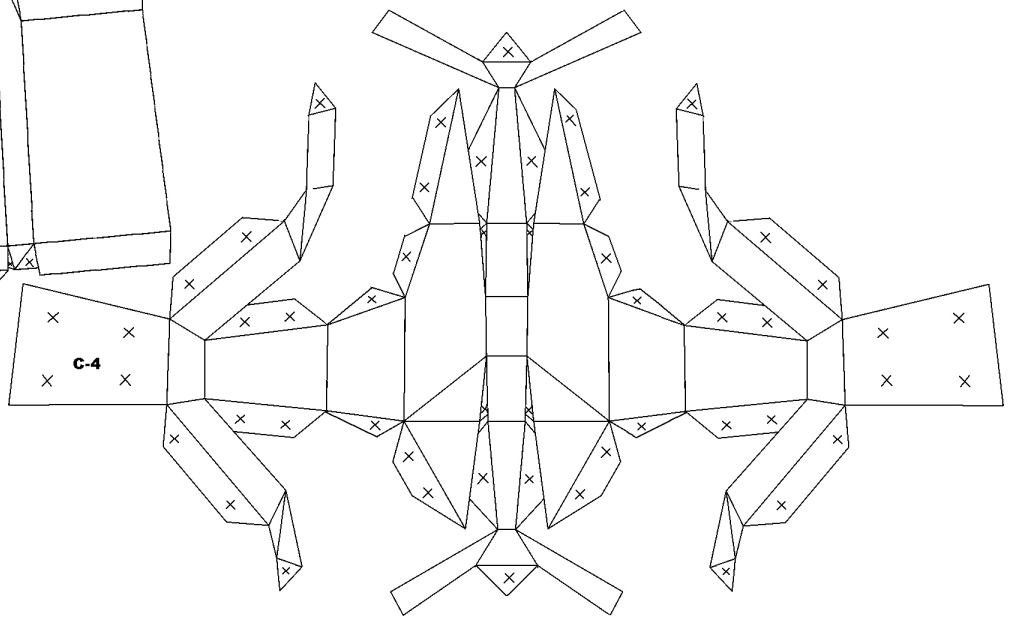

D
BLACK

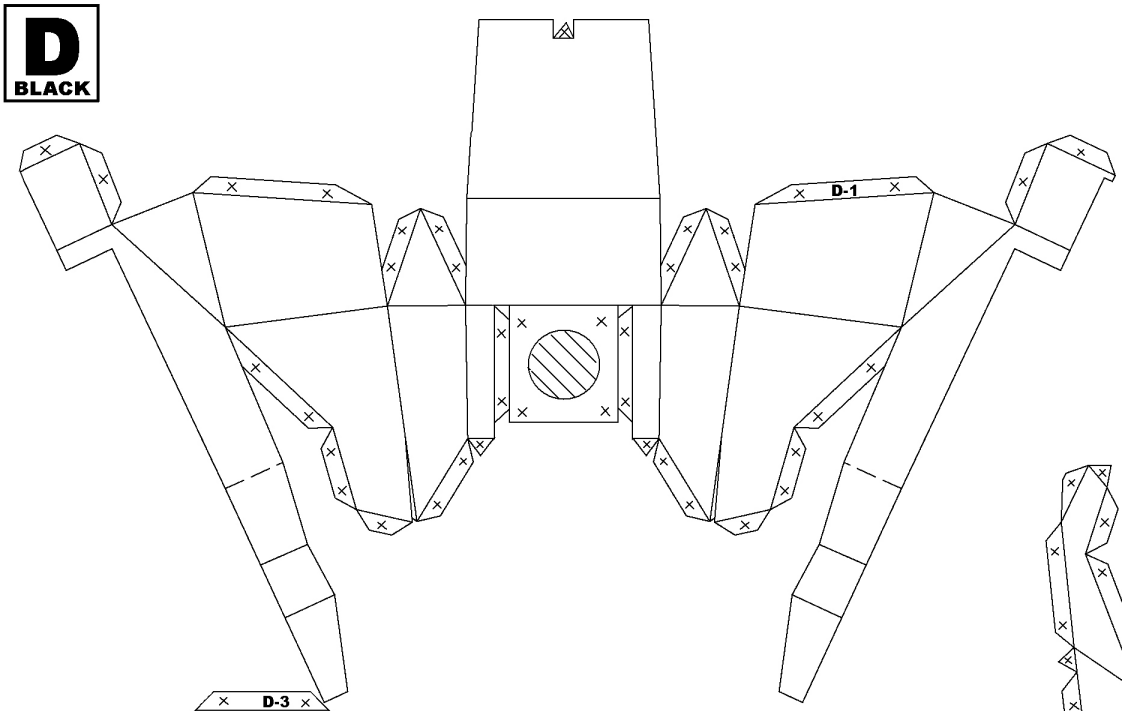

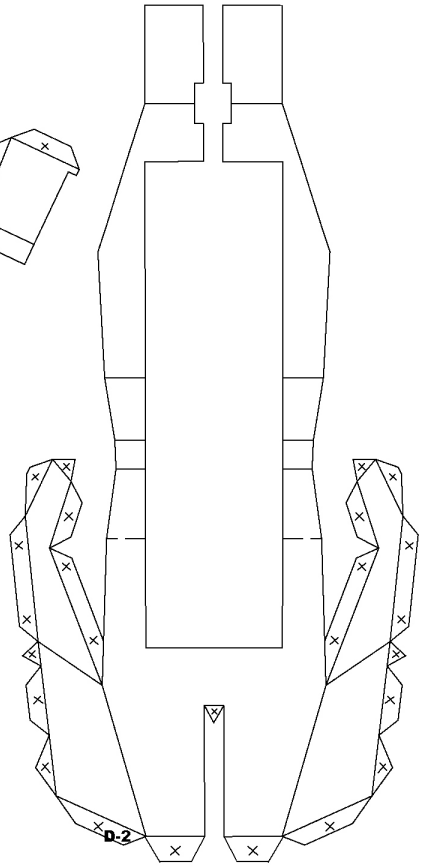

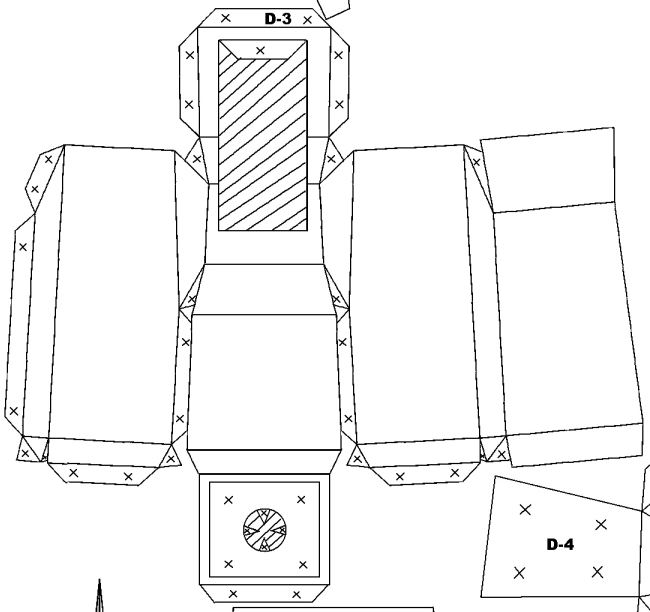

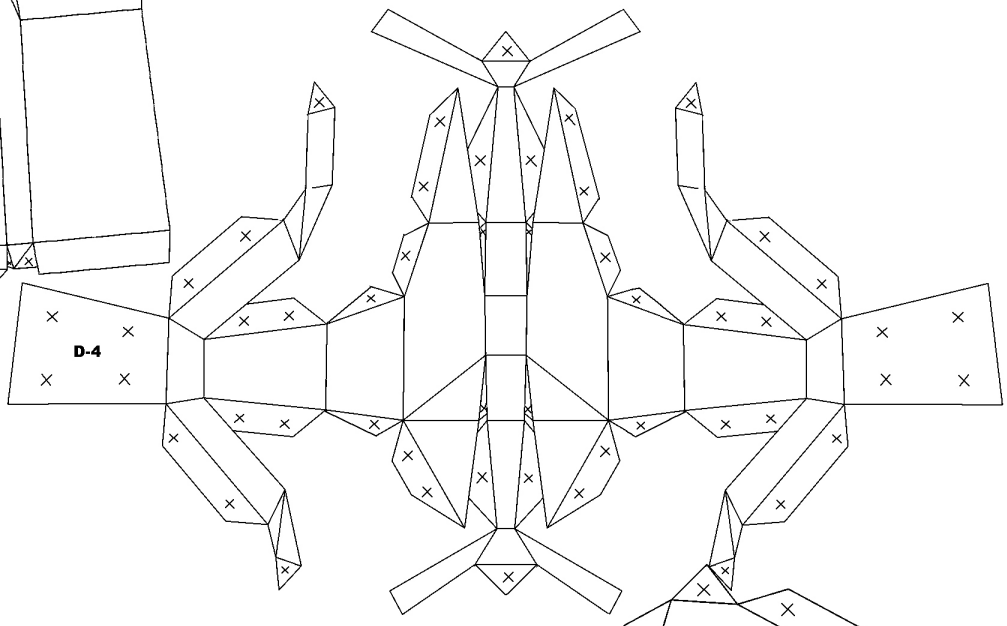

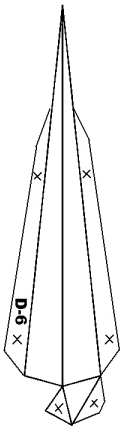

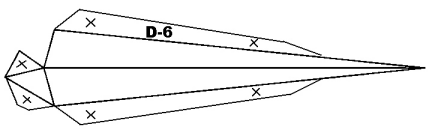

E
BLACK

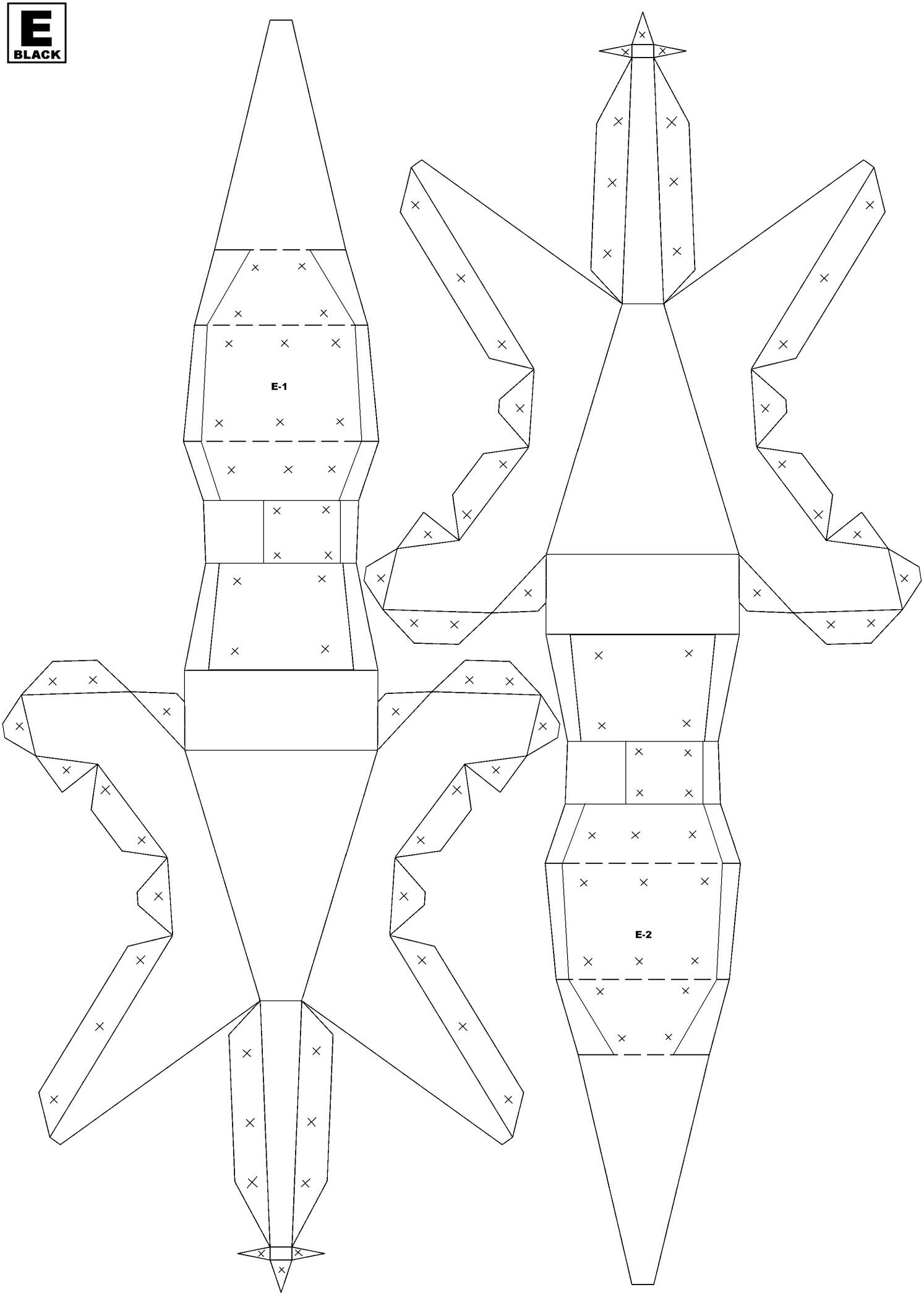

F
BLACK

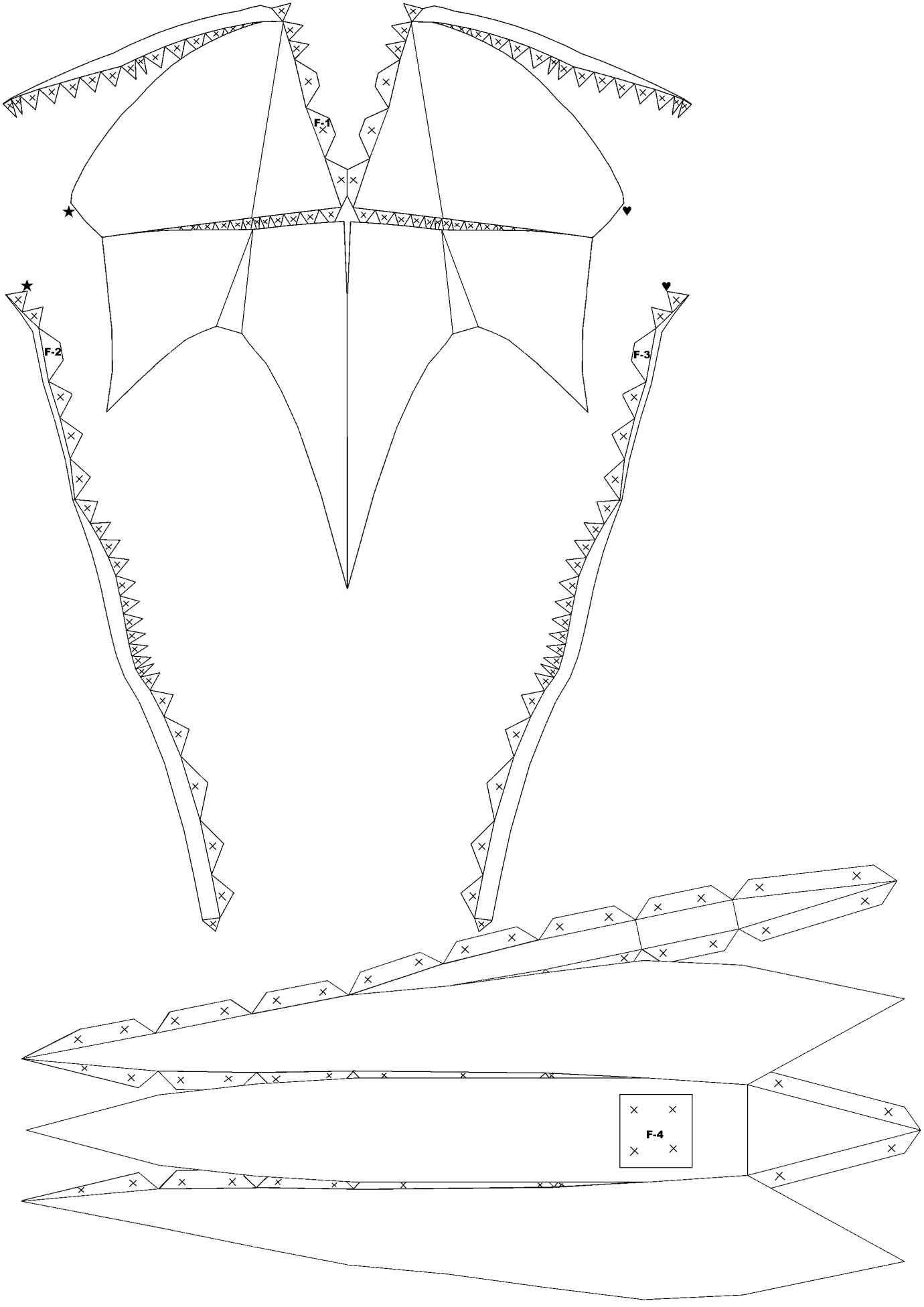

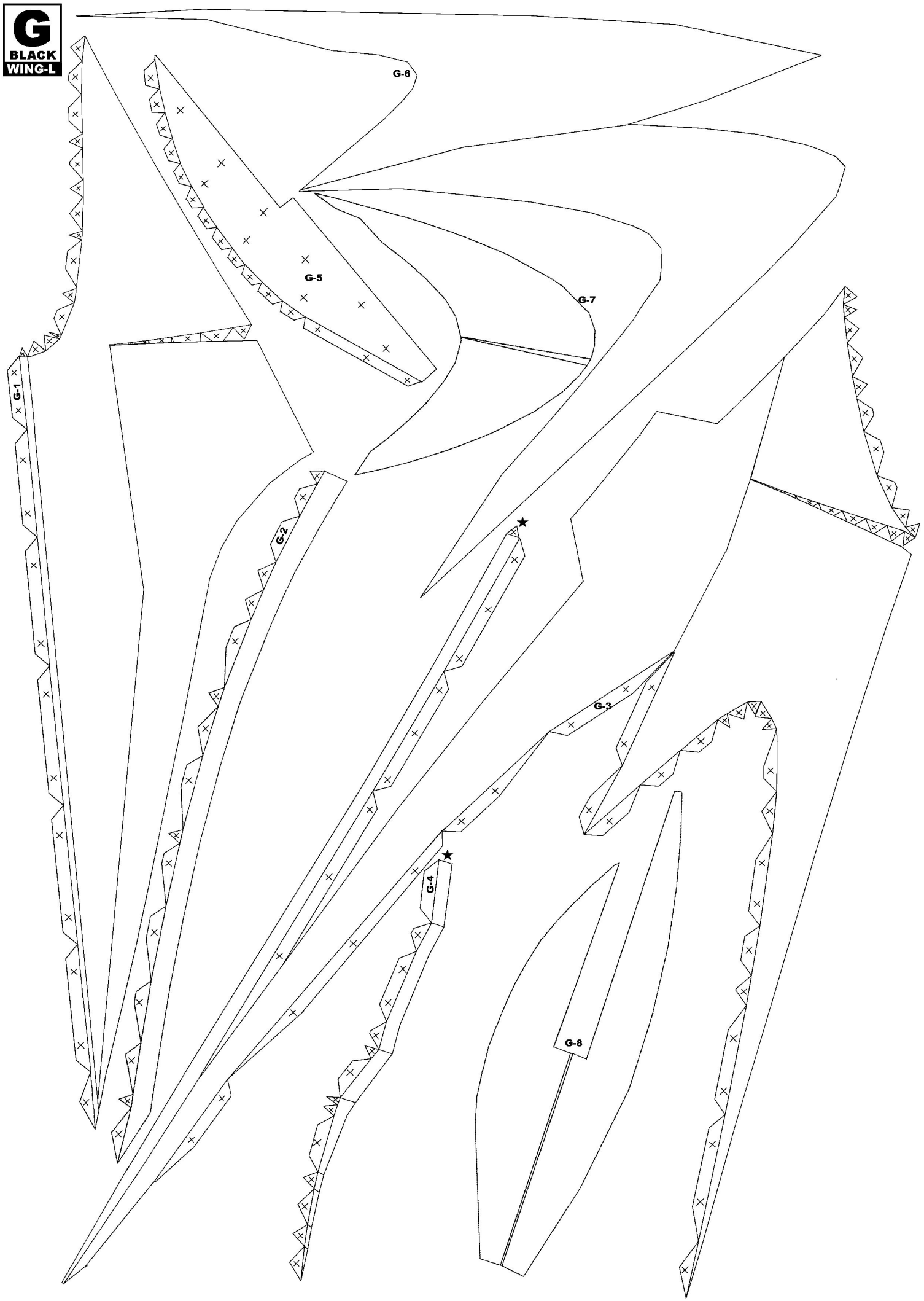
G
BLACK
WING-L
G-6
G-5
G-7
G-1
G-2
G-3
G-4
G-8

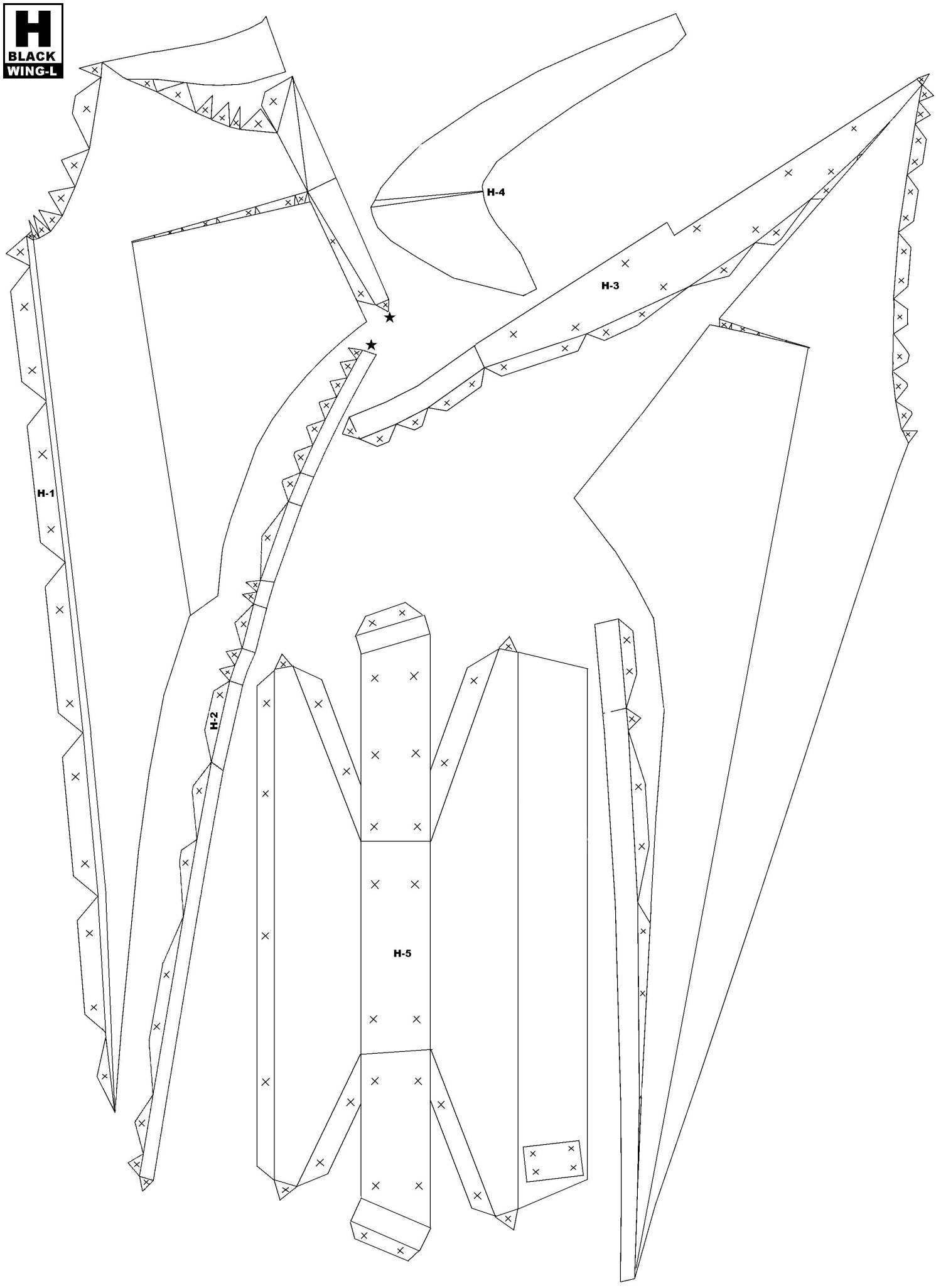
H
BLACK
WING-L
H-1
H-2
H-3
H-4
H-5

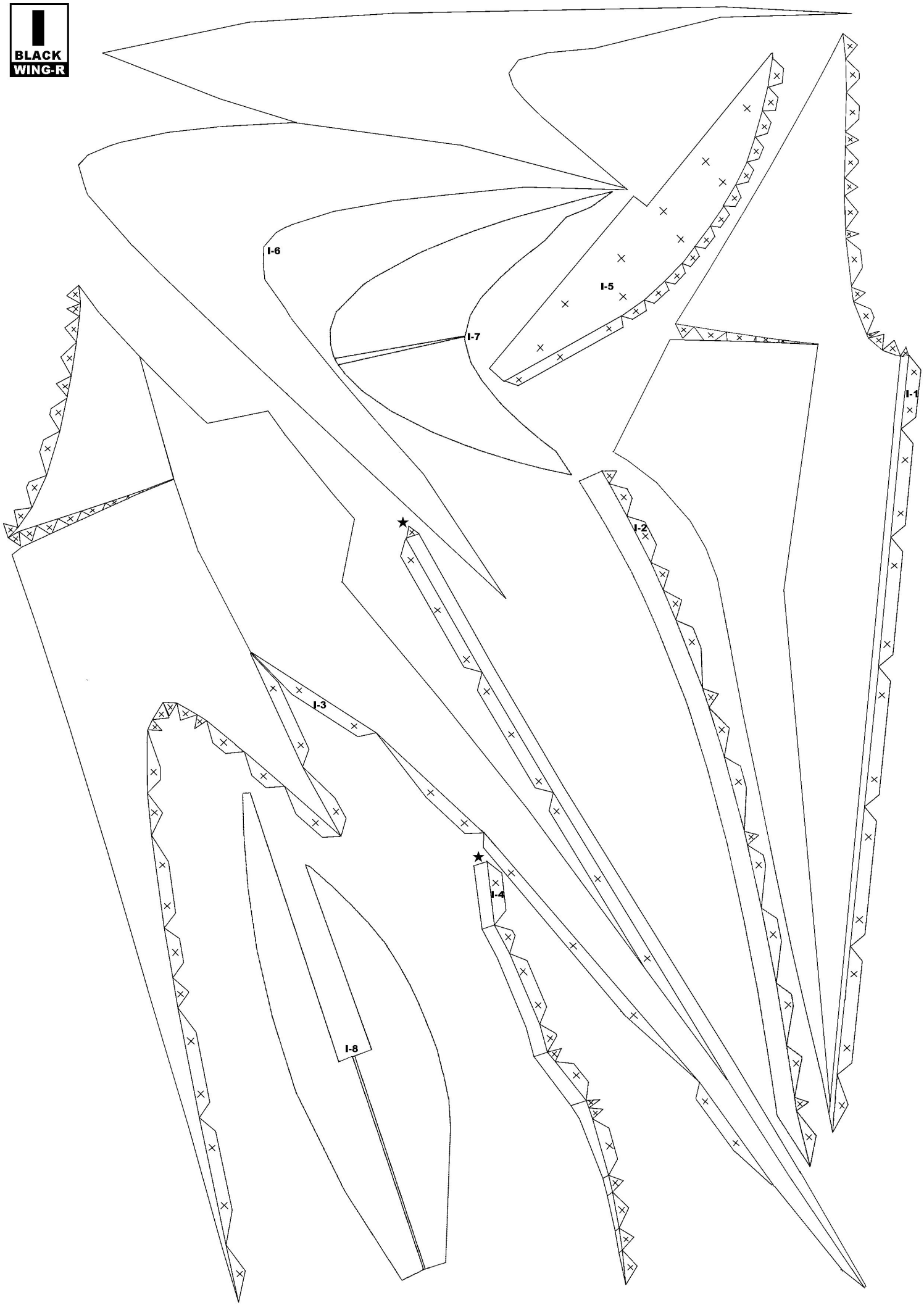
I
BLACK
WING-R
I-6
I-5
I-7
I-1
I-2
I-3
I-4
I-8

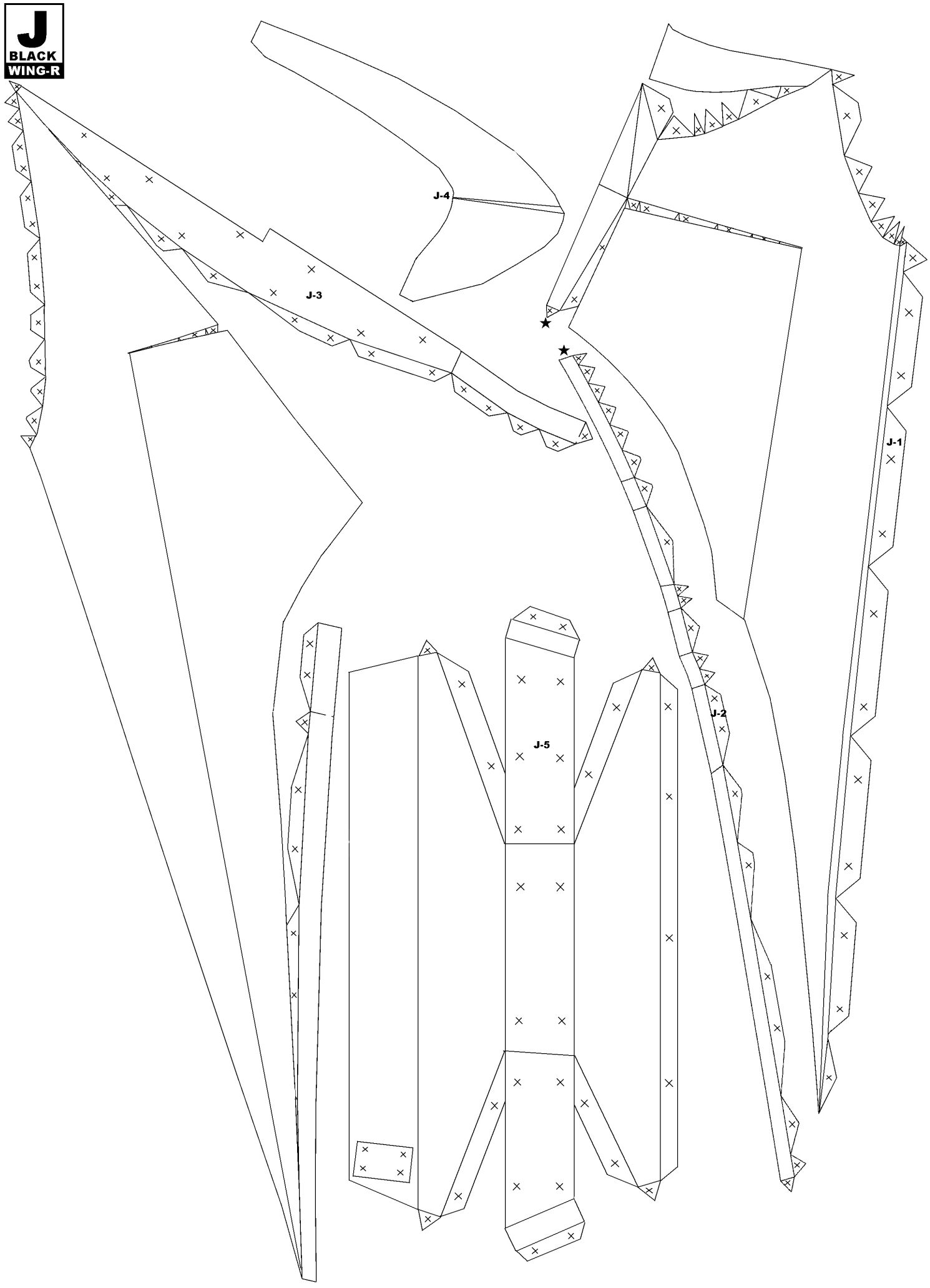
J
BLACK
WING-R
J-4
J-3
J-1
J-2
J-5

K
GRAY

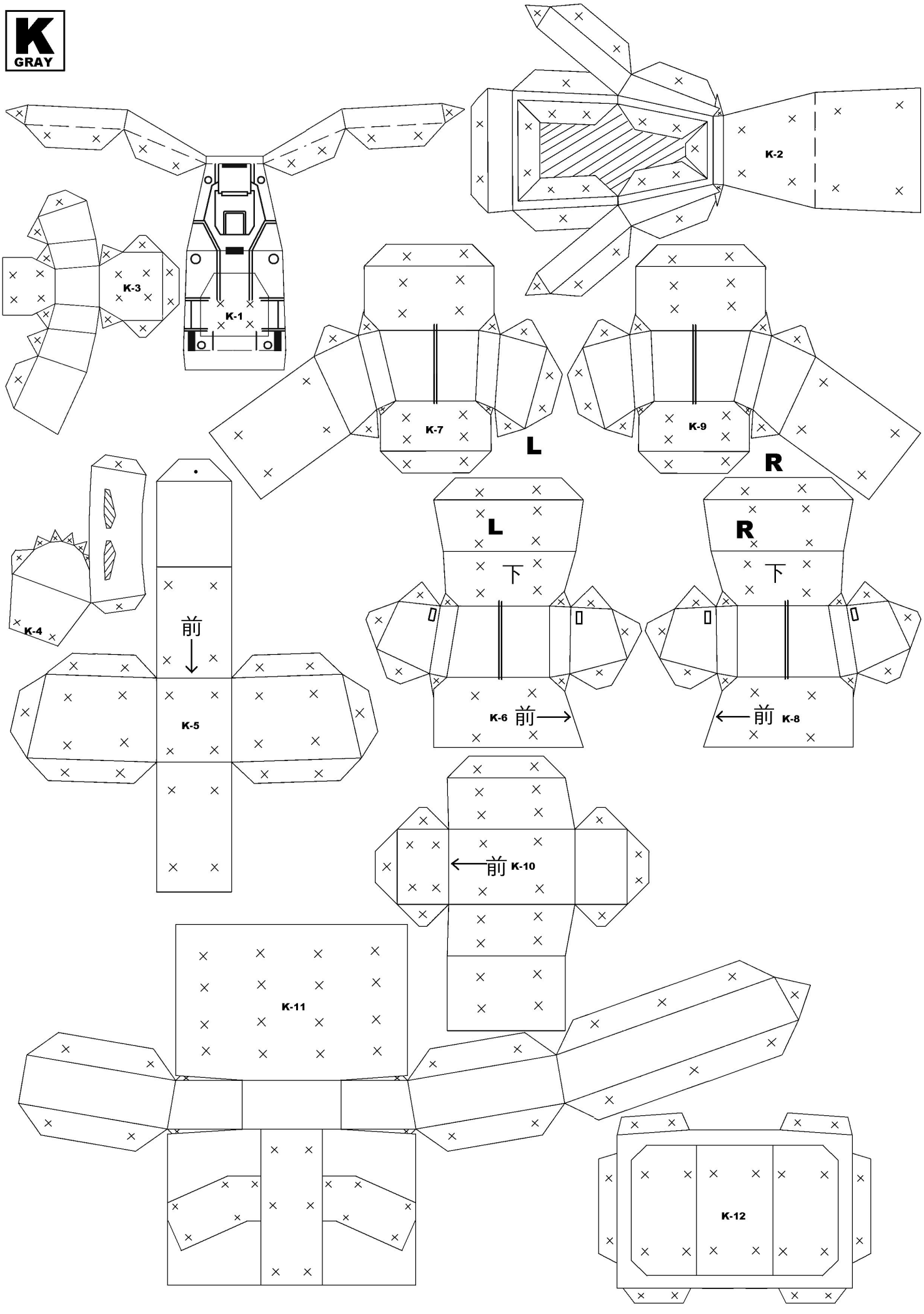

L
GRAY

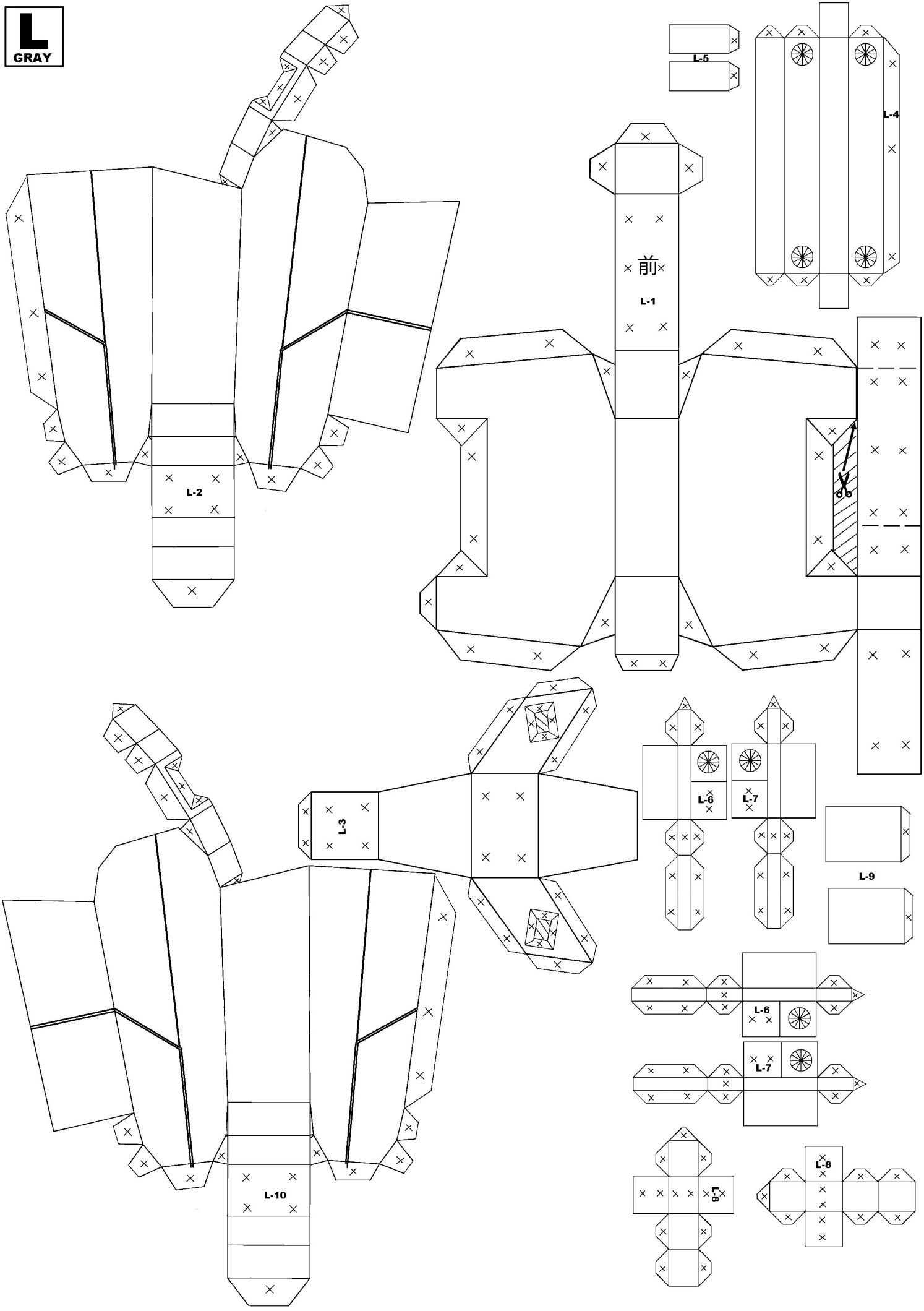

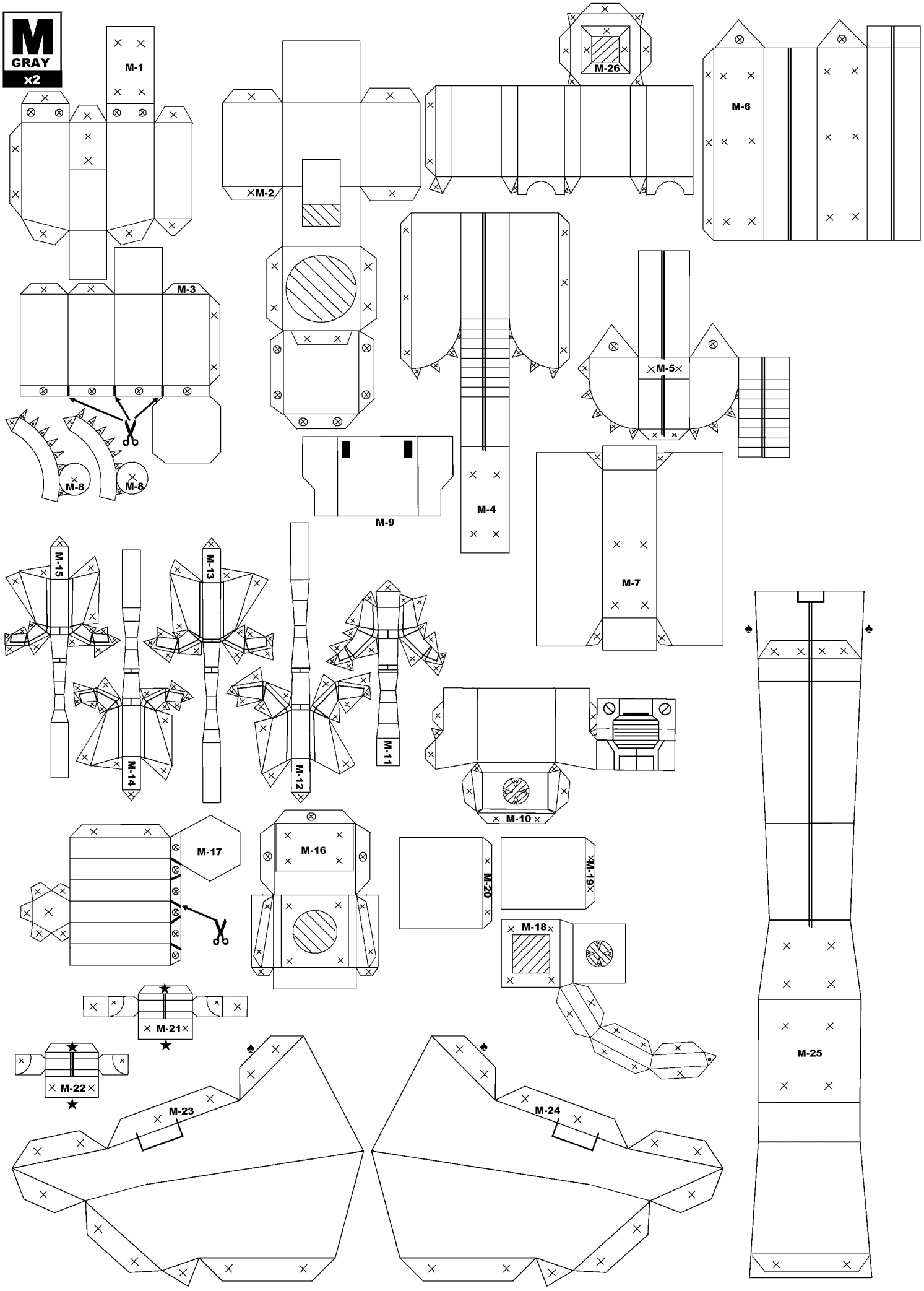
M
GRAY
x2
M-1
M-2
M-26
M-6
M-3
M-5
M-8
M-8
M-4
M-9
M-7
M-15
M-13
M-14
M-12
M-11
M-10
M-17
M-16
M-20
M-19
M-18
M-21
M-22
M-23
M-24
M-25

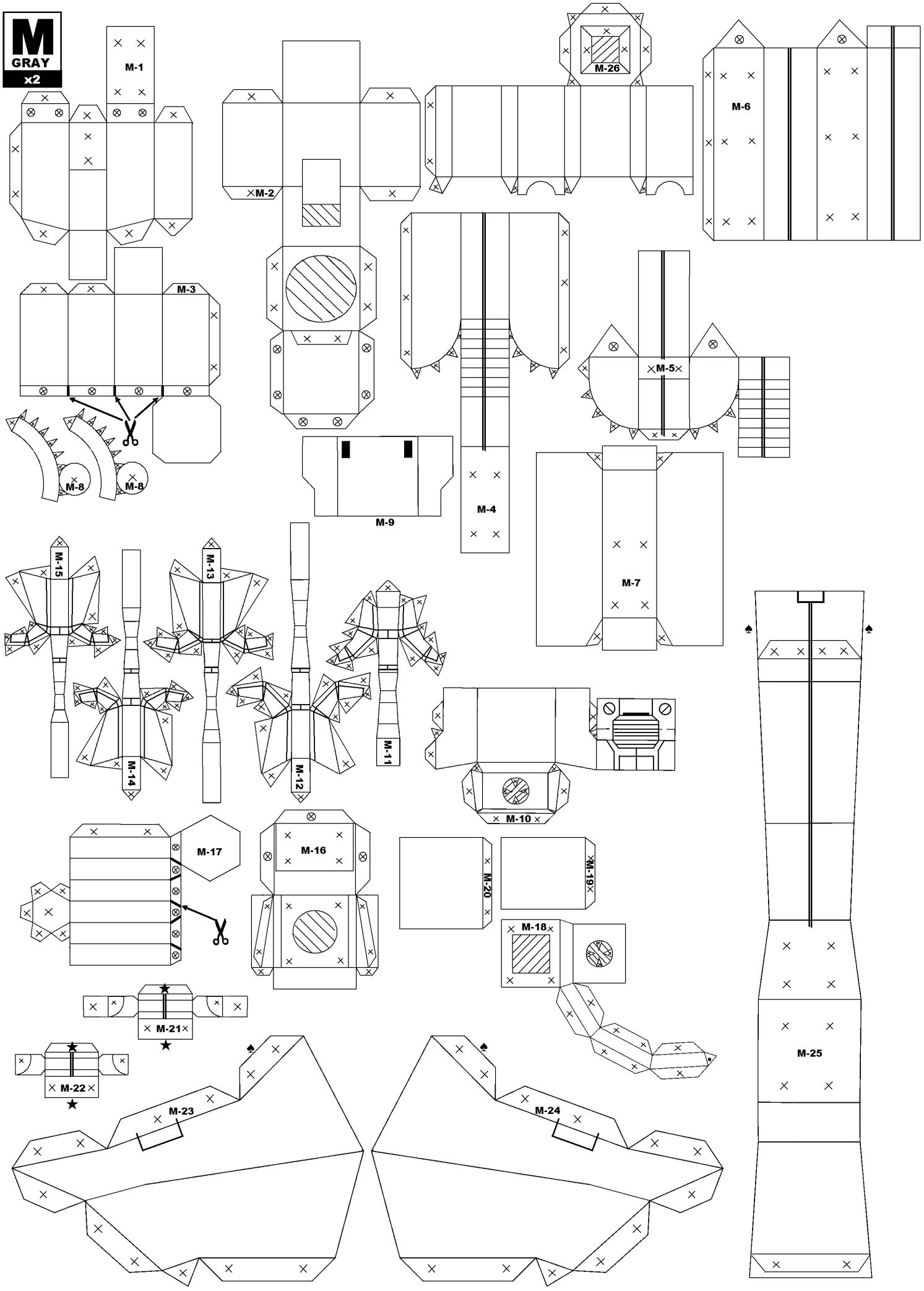
M
GRAY
x2
M-1
M-2
M-26
M-6
M-3
M-5
M-8
M-8
M-4
M-9
M-7
M-15
M-13
M-14
M-12
M-11
M-10
M-17
M-16
M-20
M-19
M-18
M-21
M-22
M-23
M-24
M-25

N
GRAY
x2

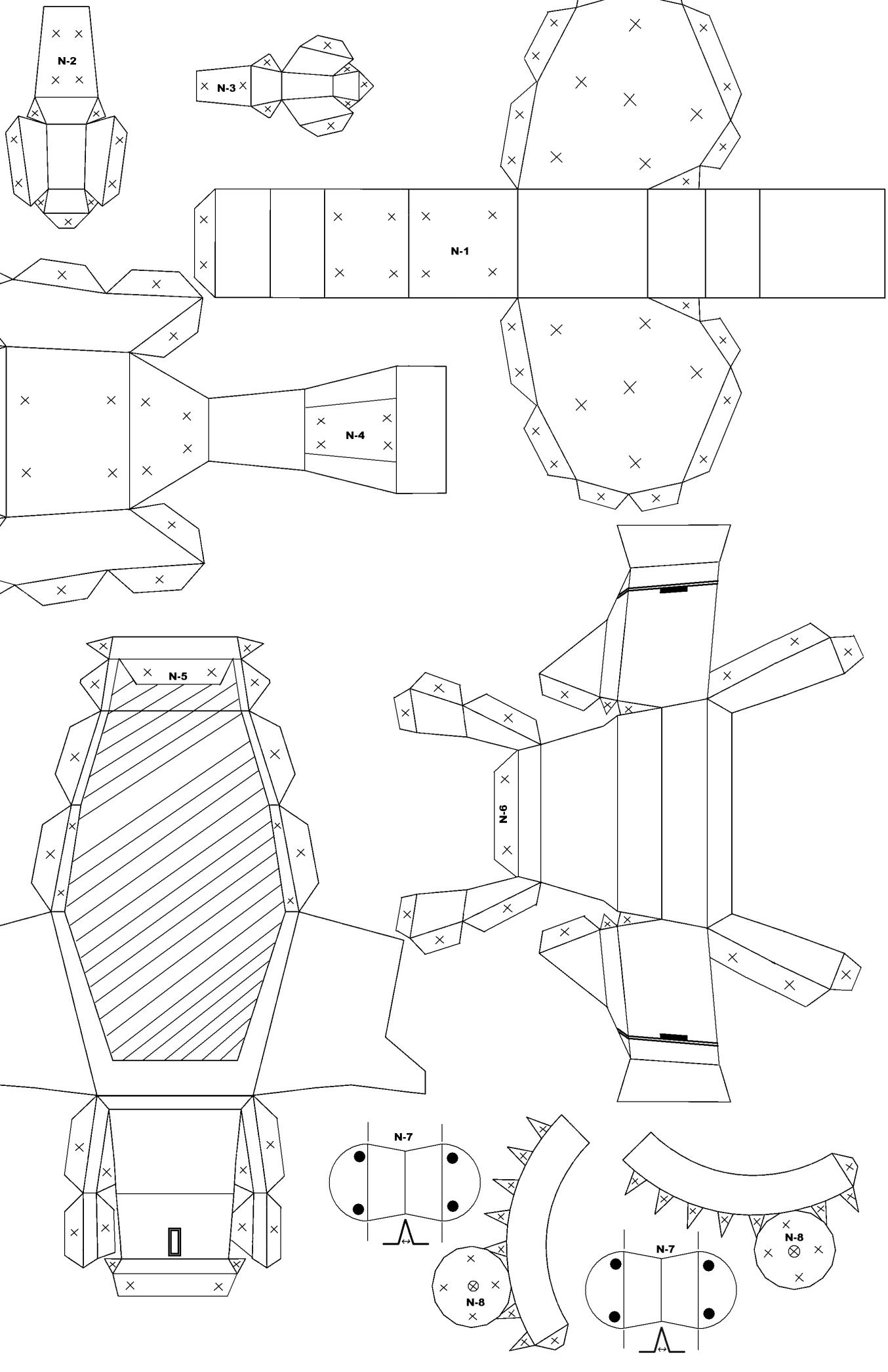

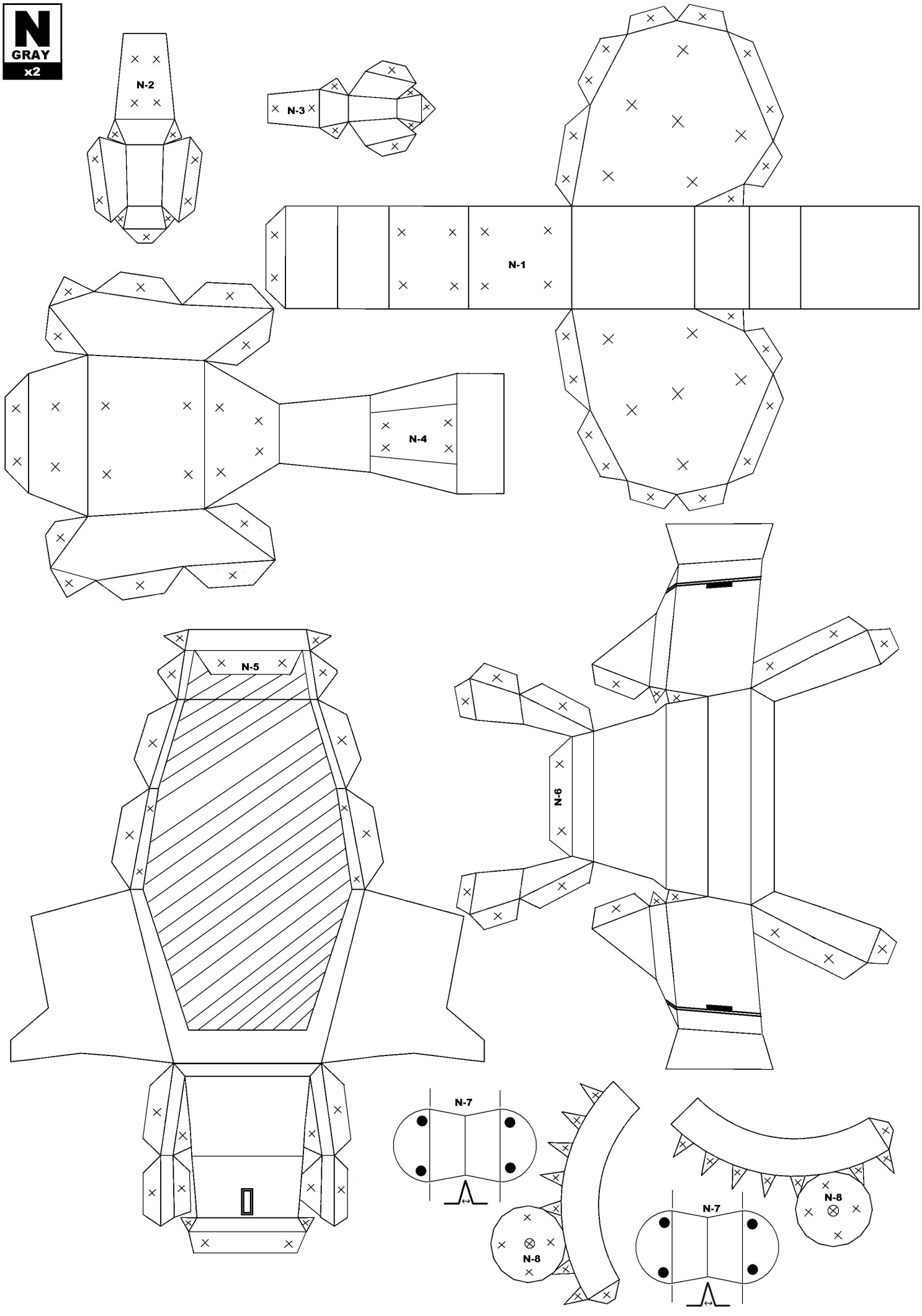
N
GRAY
x2
N-2
N-3
N-1
N-4
N-5
N-6
N-7
N-8
N-7
N-8

O
GRAY

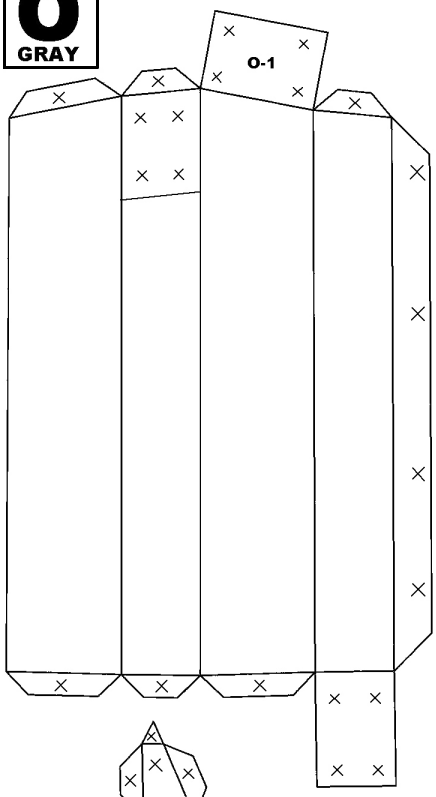

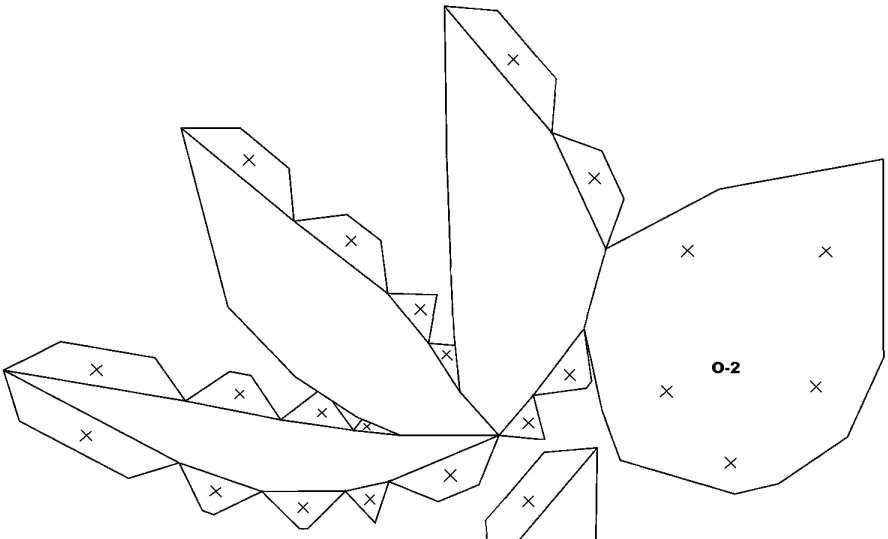

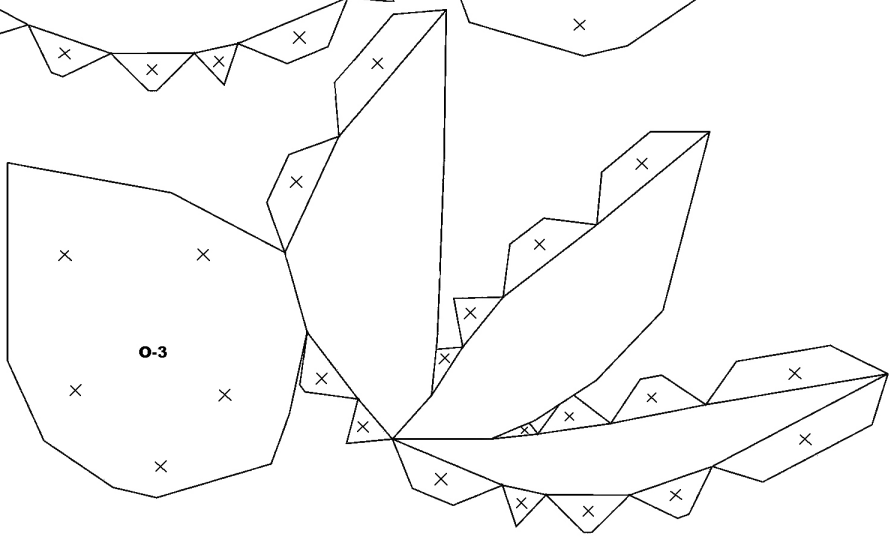

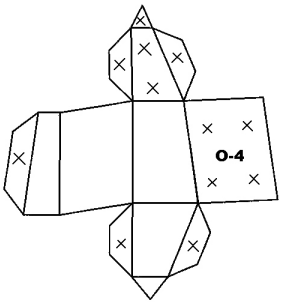

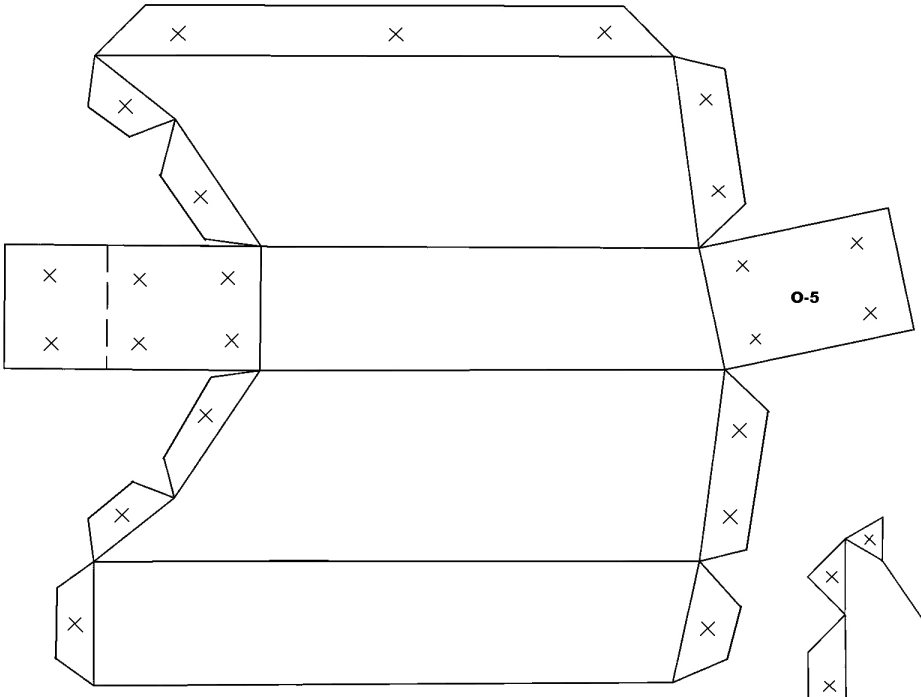

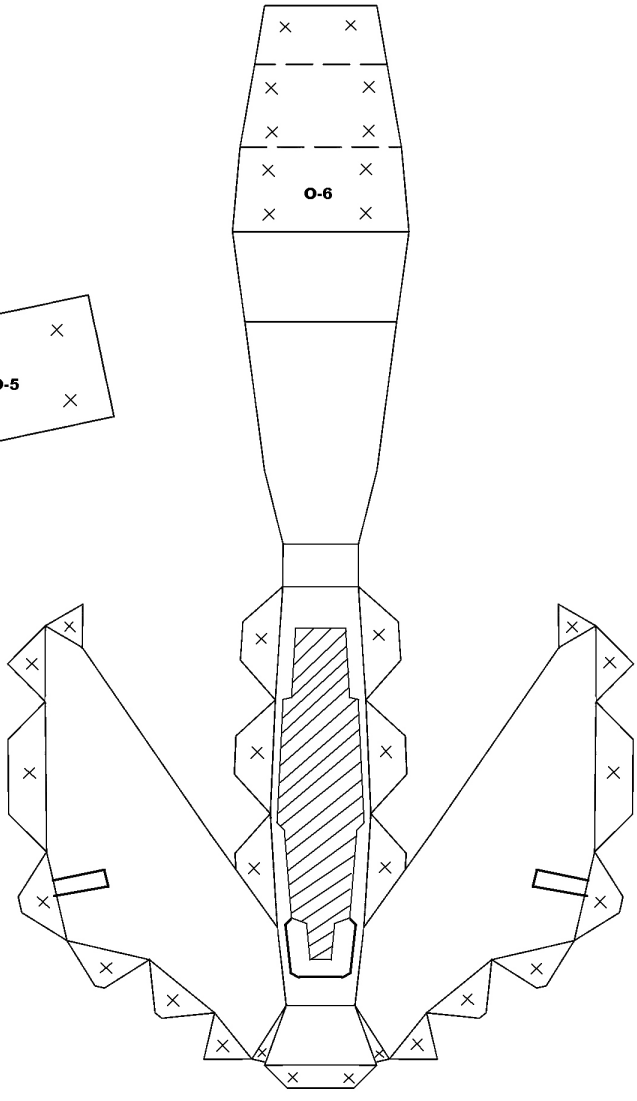

P
GRAY

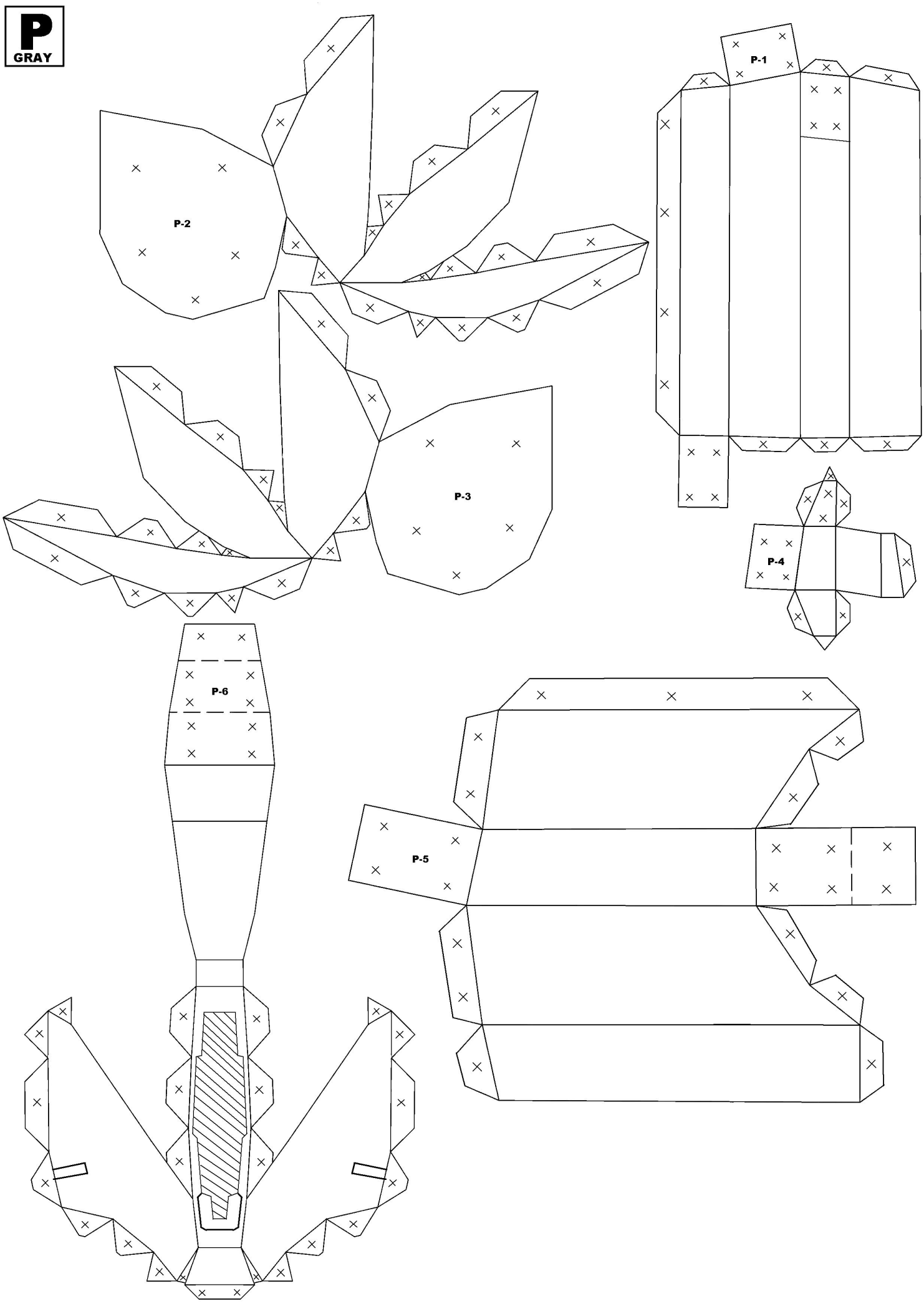

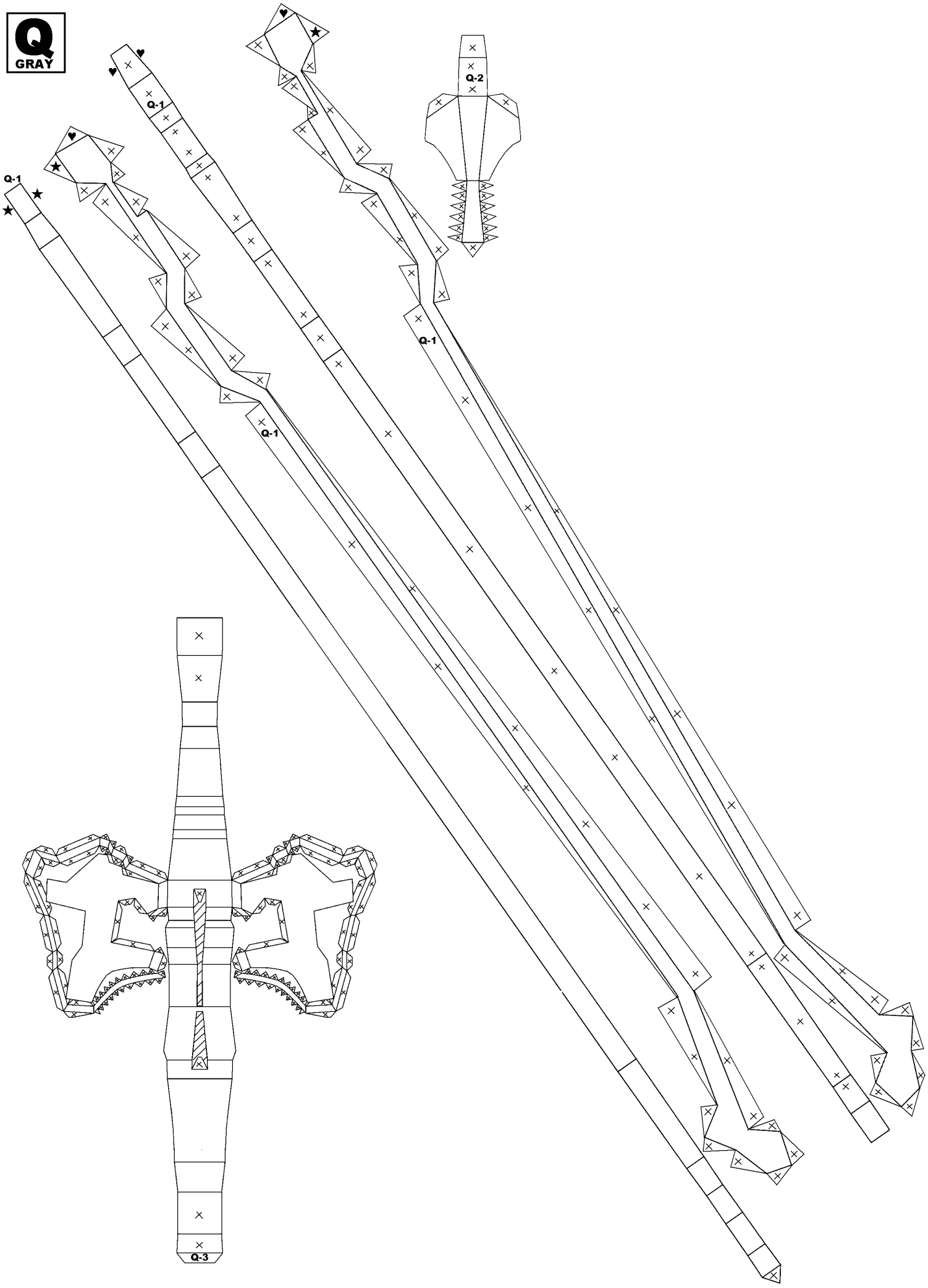
Q
GRAY
Q-1
Q-1
Q-2
Q-1
Q-1
Q-3

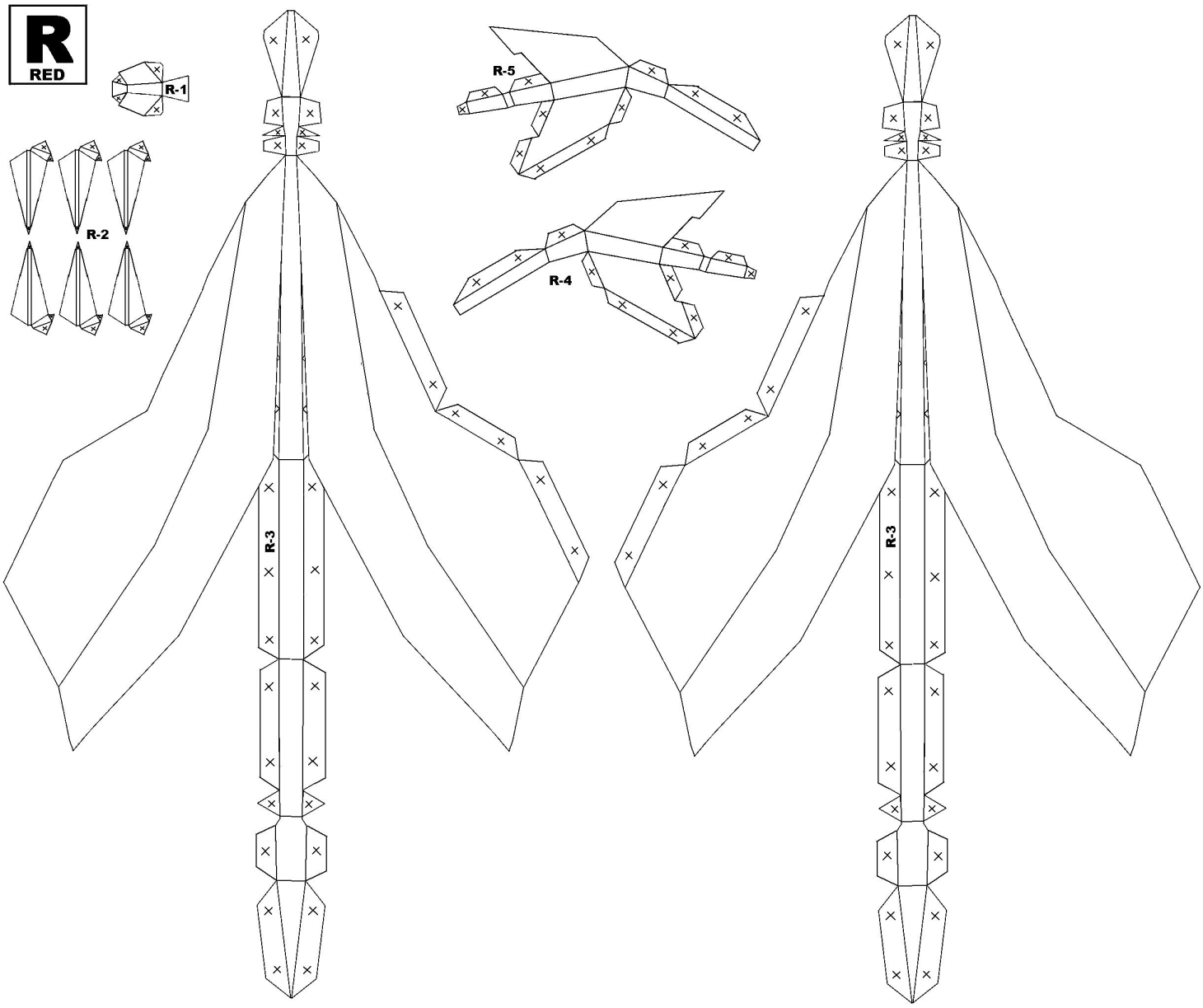
R
RED
R-1
R-2
R-3
R-4
R-5
R-3

S
YELLOW

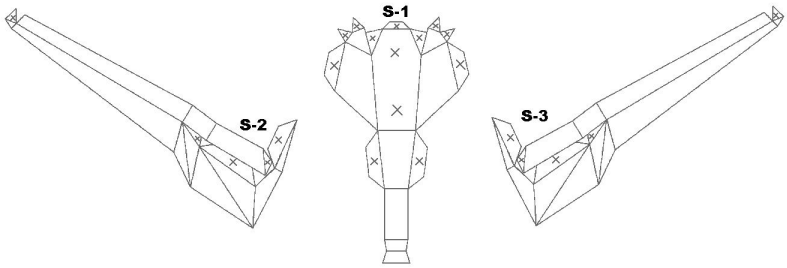

T
WHITE

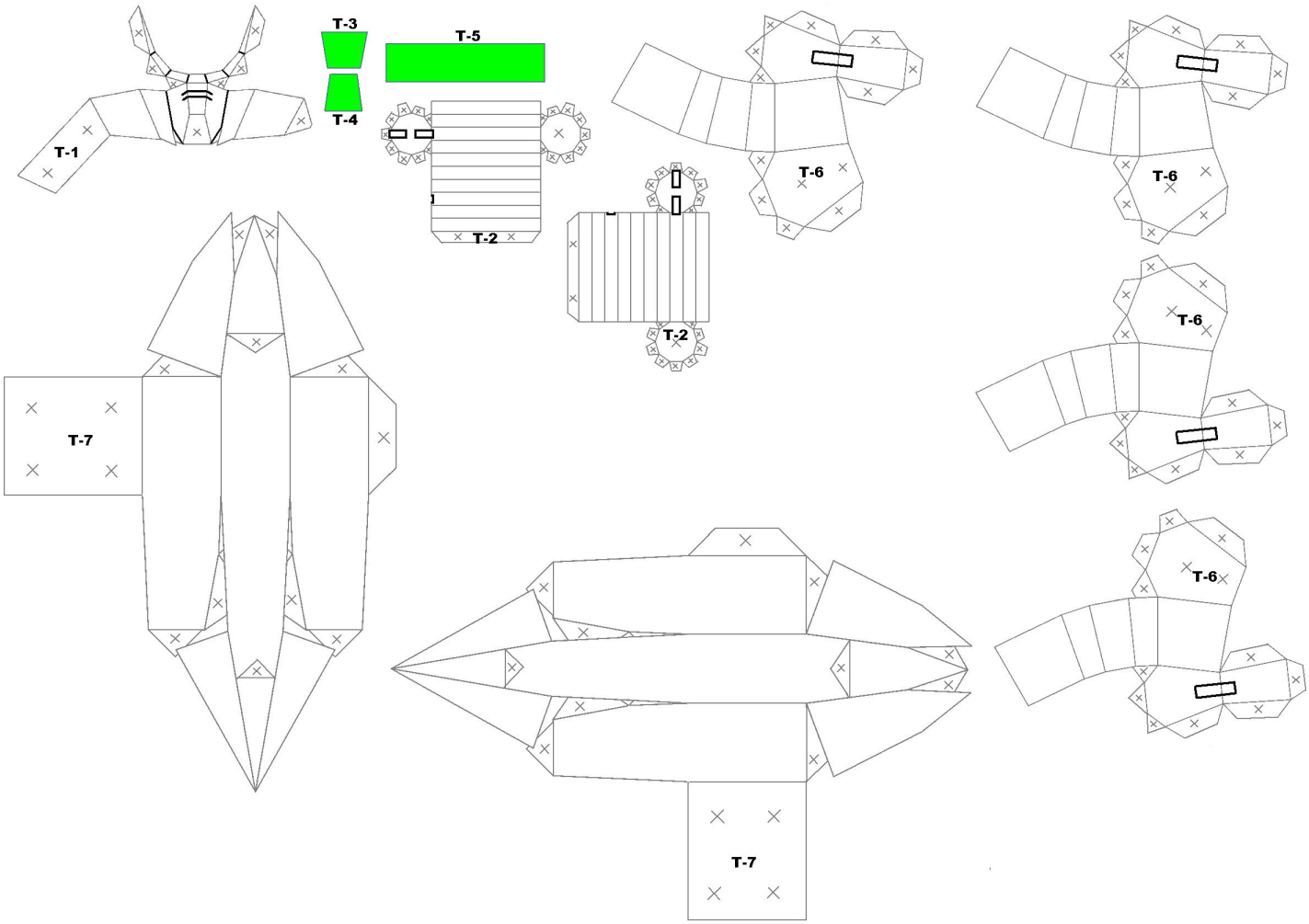

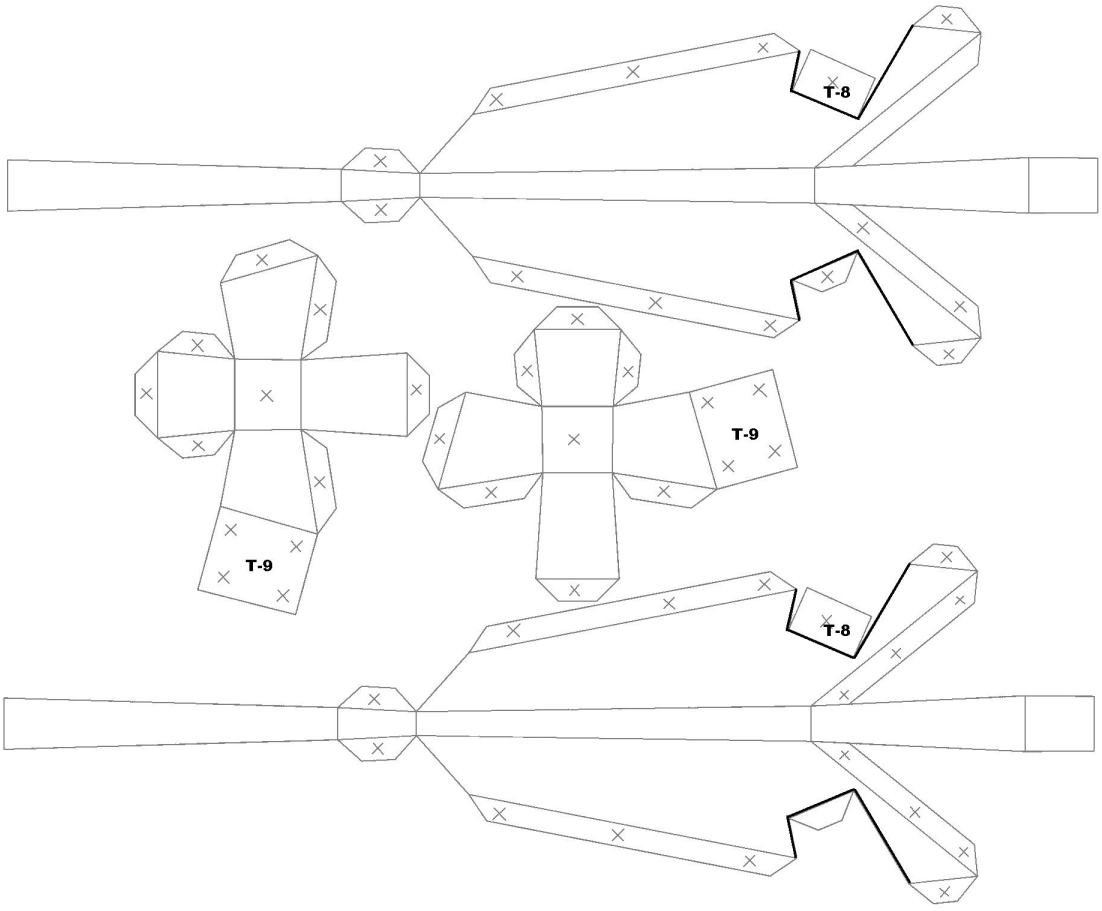

U
WHITE

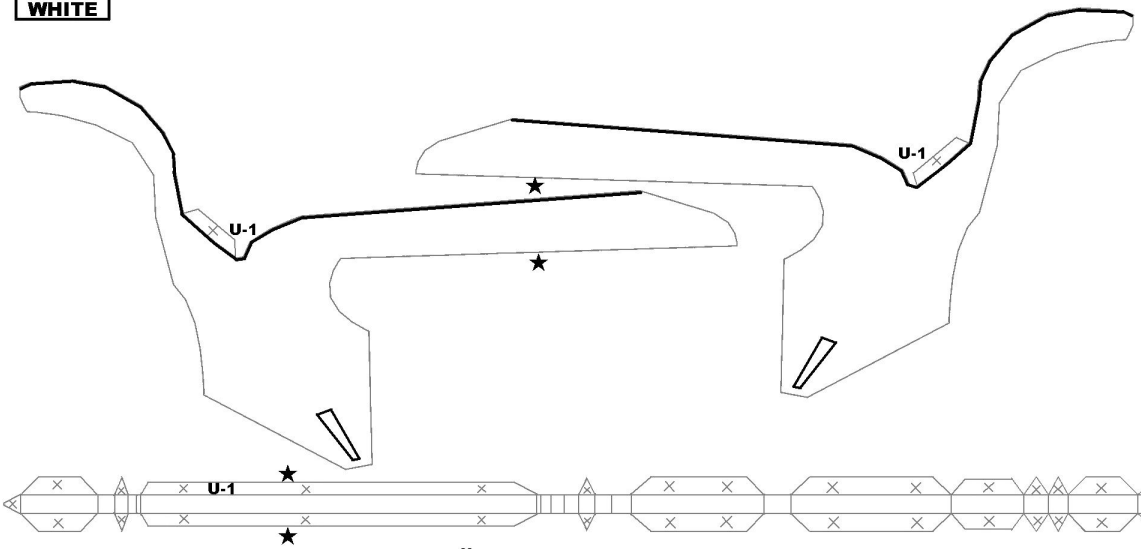

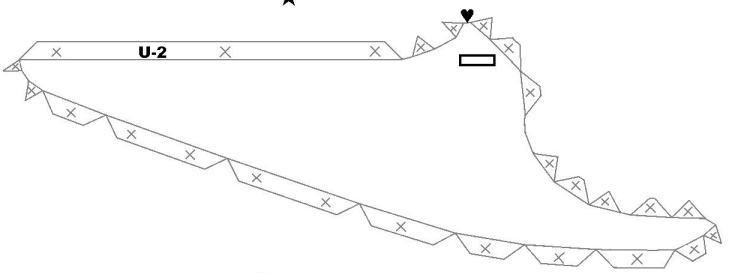

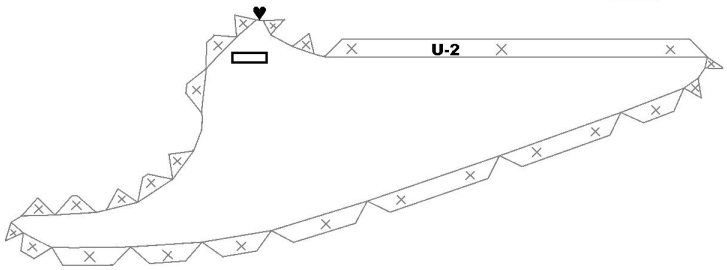

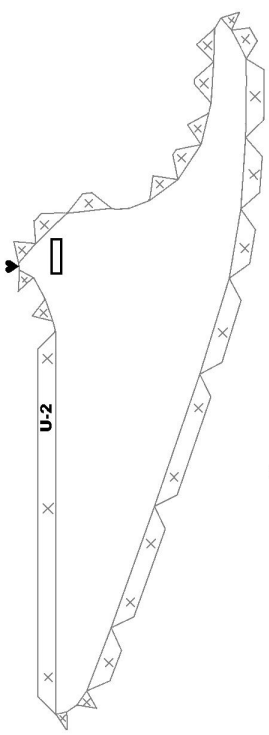

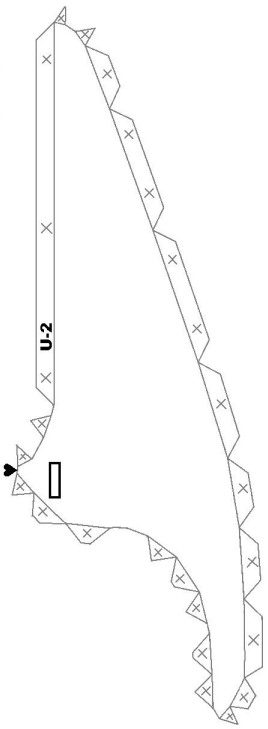

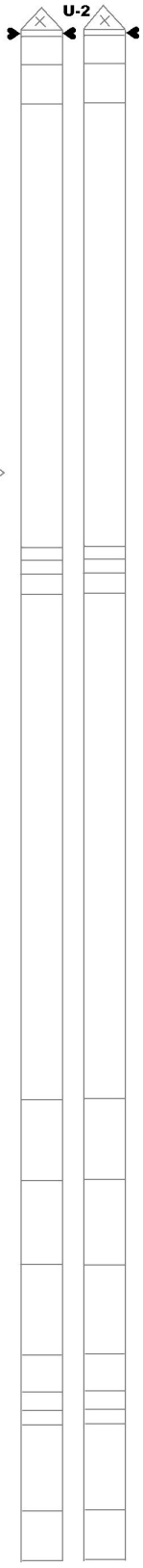

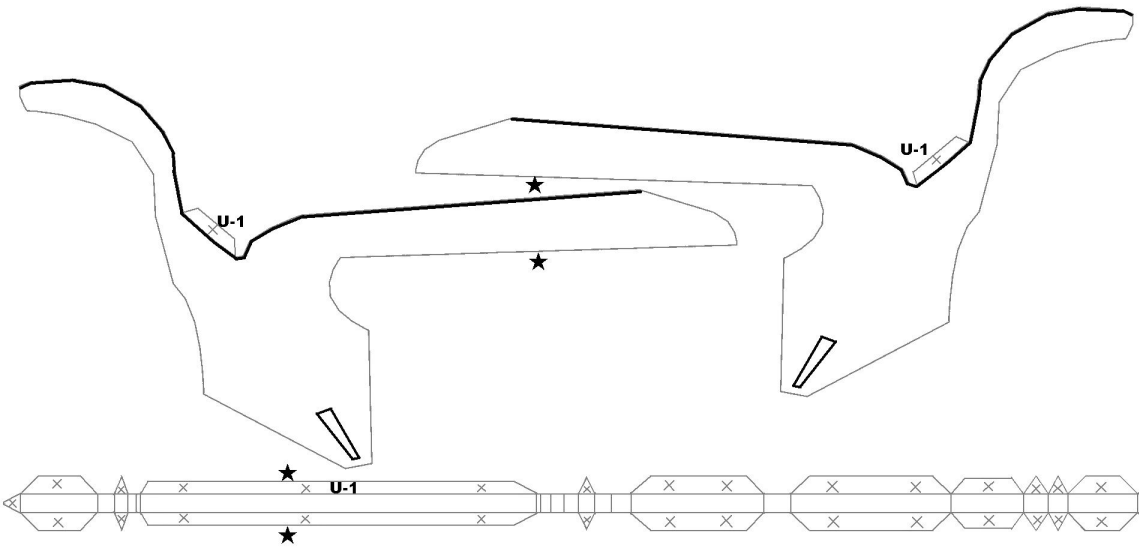

V
WHITE

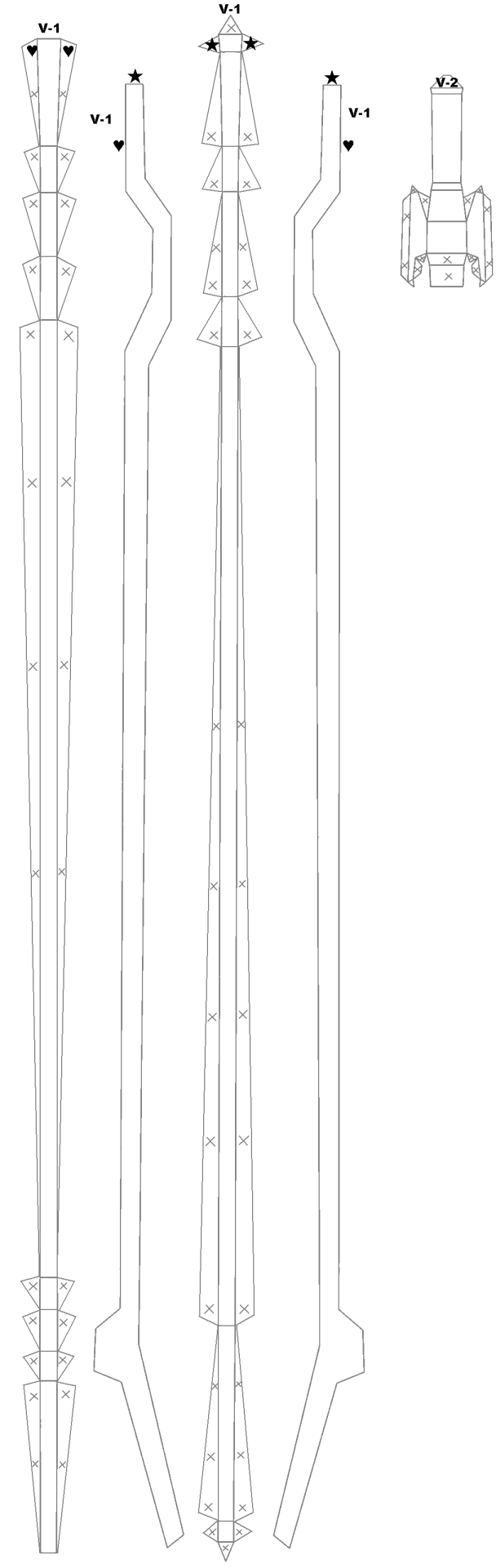

W
GREEN

W-1

